Instructions

Tandem Uni - drill

DP300 / DP 400

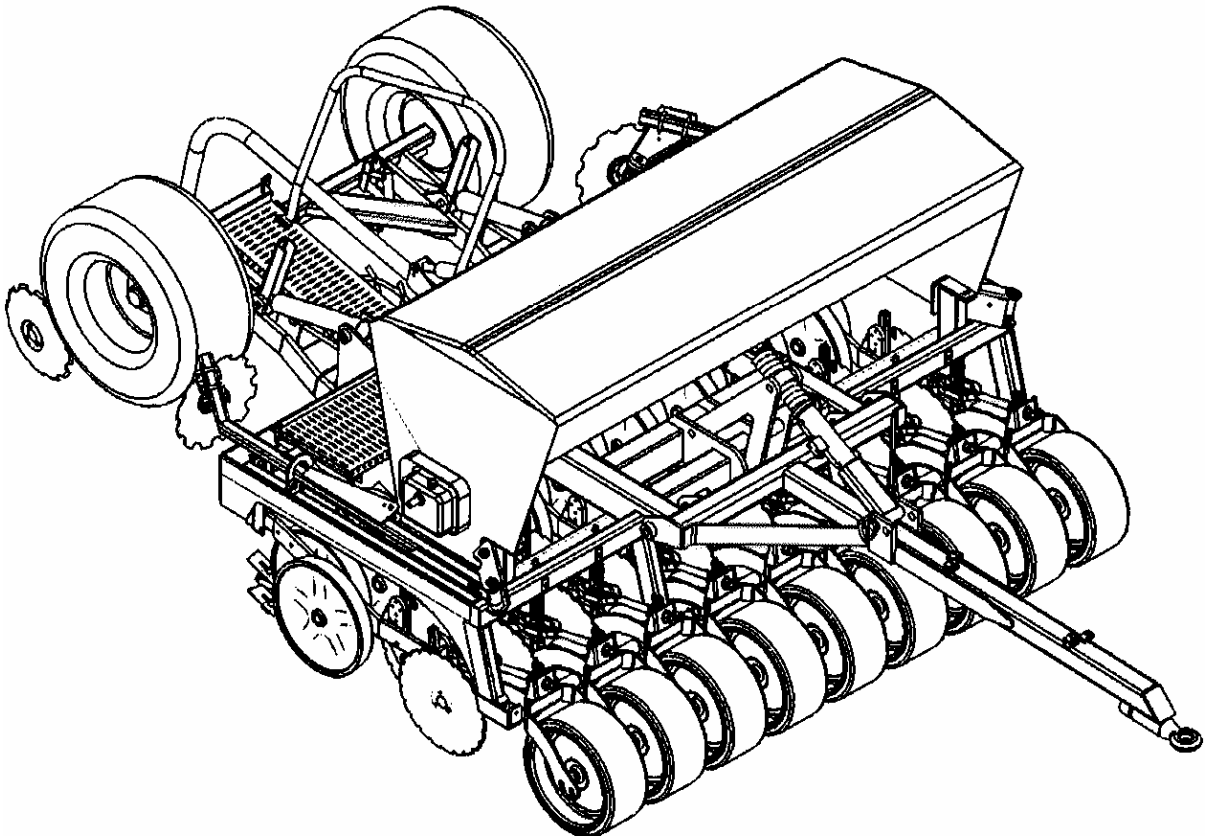

PLEASE READ CAREFULLY BEFORE USING THE MACHINE

August -dp-version 1.0

Dear Customer

Thank you for trusting our equipment and choosing the Tandem UNIDRILL.

To ENSURE correct operation, and make full use of your seed drill's capabilities, we recommend that you read this operators manual carefully.

Please do not hesitate to make suggestions or comments based on your experience; they will always be of use to us, and will help us improve our products.

Please return the duly completed guarantee form to us.

We wish you success with your seed drill.

Yours sincerely

Sam Moore
Managing Director

Guarantee Form

System Moore Drill Limited
33 Kirk Road , Ballymoney,
Co. Antrim , N. Ireland, BT53 6PP
Tel : (0044) 28276 64444
Fax (0044) 28276 65696

Machine Width: _____

Serial Number: _____

Customer Name: _____

Address: _____

_____

_____

Tel: _____

Mobile No: _____

E. mail : _____ Post Code : _____

I HAVE RECEIVED THE ABOVE MACHINE IN AN ACCEPTIBLE CONDITION AND TO THE CORRECT SPECIFICATION.

I HAVE RECEIVED AND READ THE OWNERS MANUAL FOR SAFE AND CORRECT OPERATION OF MACHINE.

I WISH TO REGISTER MY MACHINE FOR WARRANTY

SIGNED :- _____ *CUSTOMER* *DATE : -* _____

1. To be completed, detached and returned to Moore Uni Drill within 14 days of customer receipt / purchase.
2. It is essential that all details be completed.
3. Failure to complete and return this form will prevent claim settlement

Declaration of Conformity

Declaration of Conformity

Moore Uni Drill Limited,

Of 33 Kirk Road, Ballymoney, Co. Antrim, N. Ireland. BT53 6PP

hereby declare that

Model ……..

Serial No ……..

Date ……..

conforms with the following Directives and Regulations, and has been certified accordingly.

The Essential Health and Safety Regulations Directive. 98 – 37 - EC

The Proposed Seed Drills Safety Document 2000

(00/714171 DC)

Certified on behalf of Moore Uni - Drill Limited

James A O' Kane

Technical Engineer

Safety Regulations

Risk of accident

Risk of damage to the machine

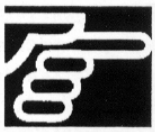

Operating tip

- These symbols are used in these instructions every time recommendations are provided concerning your safety, the safety of others or the correct operation of the machine.
- These recommendations must be given to all users of the machine.

GENERAL SAFETY REGULATIONS

Every time the tractor/machine assembly is to be started up and used, you should ensure beforehand that it complies with current legislation on safety at work and Road Traffic regulations.

GENERAL

1 - In addition to the instructions contained in this manual, legislation relating to safety instructions and accident prevention should be complied with.
2 – Warnings affixed to the machine give indications regarding safety measures to be observed and help to avoid accidents.
3 – When traveling on public roads, abide by the provisions of the Highway Code.
4 – Before starting work, it is essential that the user is familiar with the control and operating elements of the machine and their respective functions. When the machine is running, it may be too late.
5 – The user should avoid wearing loose clothing, which may be caught up, in the moving parts.
6 – We recommend using a tractor with a safety cab or roll bar conforming to standards in force.
7 – Before starting up the machine and beginning work, check the immediate surroundings, particularly for children. Make sure that visibility is adequate. Clear any persons or animals out of the danger zone.
8 – It is strictly forbidden to transport any persons or animals on board the machine whether it is in operation or not.
9 – The machine should only be coupled up to the tractor at the specially provided towing points and in accordance with applicable safety standards.
10 – Extreme care must be taken when coupling or uncoupling the machine from the tractor.
11 – Before hitching up the machine, ensure that the front axle of the tractor is sufficiently weighted. Ballast weights should be fitted to the special supports in accordance with the instructions of the tractor manufacturer.
12 – Do not exceed the maximum axle weight or the gross vehicle weight rating.
13 – Do not exceed the maximum authorized dimensions for using public roads.
14 – Before entering a public road, ensure that the protective and signaling devices (lights, reflectors, etc) required by law are fitted and working properly.
15 – All remote controls (cords, cables, rods, hoses etc) must be positioned so that they cannot accidentally set off any manoeuvre, which may cause an accident or damage.
16 – Before entering a public road, place the machine in the transport position, in accordance with the manufacturer's instructions.
17 – Never leave the driver's position whilst the tractor is running.
18 – The speed and the method of operation must always be adapted to the land, roads and paths. Avoid sudden changes of direction under all circumstances.
19 – Precision of the steering, tractor adhesion, road holding and effectiveness of the braking mechanism are influenced by factors such as the weight and nature of the machine being towed, the front axle stage and the state of the land or path. It is essential, therefore, that the appropriate care is taken for each situation.
20 – Take extra care when cornering, taking account of the overhang, length, height and weight of the machine or trailer being towed.
21 – Before using the machine, ensure that all protective devices are fitted and in good condition. Damaged protectors should be replaced immediately.
22 – Before using the machine, check that nuts and screws are tight, particularly those for attaching tools (discs, flickers, deflectors, etc). Tighten if necessary.
23 – Do not stand in the operating area of the machine.
24 – **Caution!** Be aware of any crushing and shearing zones on remote-controlled and particularly hydraulically controlled parts.

25 – Before climbing down from the tractor, or before any operation on the machine, turn off the engine; remove the key from the ignition and wait until all moving parts have come to a standstill.
26 – Do not stand between the tractor and the machine until the handbrake has been applied and/or the wheels have been wedged.
27 – Before any operation on the machine, ensure that it cannot be started up accidentally.
28 – Do not use the lifting ring to lift the machine when it is loaded.

PROPER USE OF THE MACHINE

The seed drill must only be used for tasks for which it has been designed. The manufacturer will not be liable for any damage caused by using the machine for applications other than those specified by the manufacturer. Using the machine for purposes other than those originally intended will be done so entirely at the user's risk. Proper use of the machine also implies:
- complying with instructions on use, care and maintenance provided by the manufacturer;
- using only original or manufacturer recommended spare parts, equipment and accessories.

The seed drill must only be operated, maintained and repaired by competent persons, familiar with the specifications and methods of operation of the machine. These persons must also be informed of the dangers to which they may be exposed.
The user must strictly abide by current legislation regarding:
- accident prevention
- safety at work (Health and Safety Regulations)
- transport on public roads (Road Traffic Regulations).

Strict compliance with warnings affixed to the machine is obligatory.
The owner of the equipment shall become liable for any damage resulting from alterations made to the machine by the user or any other person, without the prior written consent of the manufacturer.

HITCHING

1 – When hitching or unhitching the machine form the tractor, place the control lever of the hydraulic lift in such a position that the lifting mechanism cannot be activated accidentally.
2 – When hitching the machine to the three-point-lifting mechanism of the tractor, ensure that the diameters of the pins or gudgeons correspond to the diameter of the tractor ball joints.
3 – **Caution!** In the three-point lifting zone, there may be a danger of crushing and shearing
4 – Do not stand between the tractor and the machine whilst operating the external lift control lever.
5 – When in transport, lifting mechanism stabilizer bars must be fitted to the machine to avoid floating and side movement.
6 – When transporting the machine in the raised position, lock the lift control lever.

DRIVE EQUIPMENT

(Power take-off and universal drive shafts)
1 – Only use universal drive shafts supplied with the machine of recommended by the manufacturer.
2 – Power take-off and universal drive shaft guards must always be fitted and in good condition.
3 – Ensure that the tubes of the universal drive shafts are properly guarded, both in the working position and in the transport position.
4 – Before connecting or disconnecting a universal drive shaft, disengage the power take-off, turn off the engine and remove the key from the ignition.
5 – If the primary universal drive shaft is fitted with a torque limiter or a free wheel, these must be mounted on the machine power take-off.
6 – Always ensure that universal drive shafts are fitted and locked correctly.
7 – Always ensure that universal drive shaft guards are immobilized in rotation using the specially provided chains.
8 – Before engaging power take-off ensure that the speed selected and the direction of rotation of the power take-off, comply with the manufacturer's instructions.
9 – Before engaging power take-off, ensure that no persons or animals are close to the machine.
10 – Disengage power take-off when the universal drive shaft angle limits laid down by the manufacturer are in danger of being exceeded.
11 – **Caution!** When power take-off has been disengaged, moving parts may continue to rotate for a few moments. Do not approach until they have reached a complete standstill.
12 – On removal from the machine, rest the universal drive shafts on the specially provided supports.
13 – After disconnecting the universal drive shafts from the power take-off, the protective cap should be fitted to the power take-off.
14 – Damaged power take-off and universal drive shaft guards must be replaced immediately.

HYDRAULIC CIRCUIT

1 – **Caution!** The hydraulic circuit is pressurized.
2 – When fitting hydraulic motors or cylinders, ensure that the circuits are connected correctly in accordance with the manufacturer's guidelines.
3 – Before fitting a hose to the tractor's hydraulic circuit, ensure that the tractor-side and machine-side circuits are not pressurized.
4 – The user of the machine is strongly recommended to identify the hydraulic couplings between the tractor and the machine in order to avoid wrong connection. **Caution!** There is a danger of reversing the functions (for example: raise/lower).
5 – Check hydraulic hoses once a year, for:
- Damage to the outer surface
- Porosity of the outer surface
- Deformation with and without pressure
- State of the fittings and seals

The maximum working life for hoses is 6 years. When replacing them, ensure that only hoses with the specifications and grade recommended by the machine manufacturer are used.

6 – When a leak is found, all necessary precautions should be taken to avoid accidents.
7 – Pressurized liquid, particularly hydraulic circuit oil, may cause serious injury if it comes into contact with the skin. In the case of injury, consult a doctor immediately. There is a risk of infection.
8 – Before any operation on the hydraulic circuit, lower the machine, release the pressure from the circuit, turn off the engine and remove the key from the ignition.

MAINTENANCE

1 – Before commencing any maintenance, servicing or repair work, or before attempting to locate the source of a breakdown or fault, it is essential that the power take-off is disengaged, the engine turned off and the key removed from the ignition.
2 – Check regularly that nuts and screws are not loose. Tighten if necessary.
3 – Before carrying out maintenance work on a raised machine, prop it up using appropriate means of support.
4 – When replacing a working part (seed drill coulter or disc etc) wear protective gloves and only use appropriate tools.
5 – To protect the environment, it is forbidden to throw away oil, grease or filters of any kind. Give them to specialist recycling firms.
6 – Before operating on the electric circuit, disconnect the power source.
7 – Protective devices likely to be exposed to wear and tear should be checked regularly. Replace them immediately if they are damaged.
8 –Spare parts should comply with the standards and specifications laid down by the manufacturer. Only use Moore spare parts.
9 – Before commencing any electric welding work on the tractor or the towed machine, disconnect the alternator and battery cables.
10 – Repairs affecting parts under stress or pressure, (springs, pressure accumulators, etc) should be carried out by suitably qualified engineers with special tools

Danger

A = Risk of crushing
B = Marker operating zone
C = Moving parts
D = Do not travel on the platform
E = Rotating agitator shaft

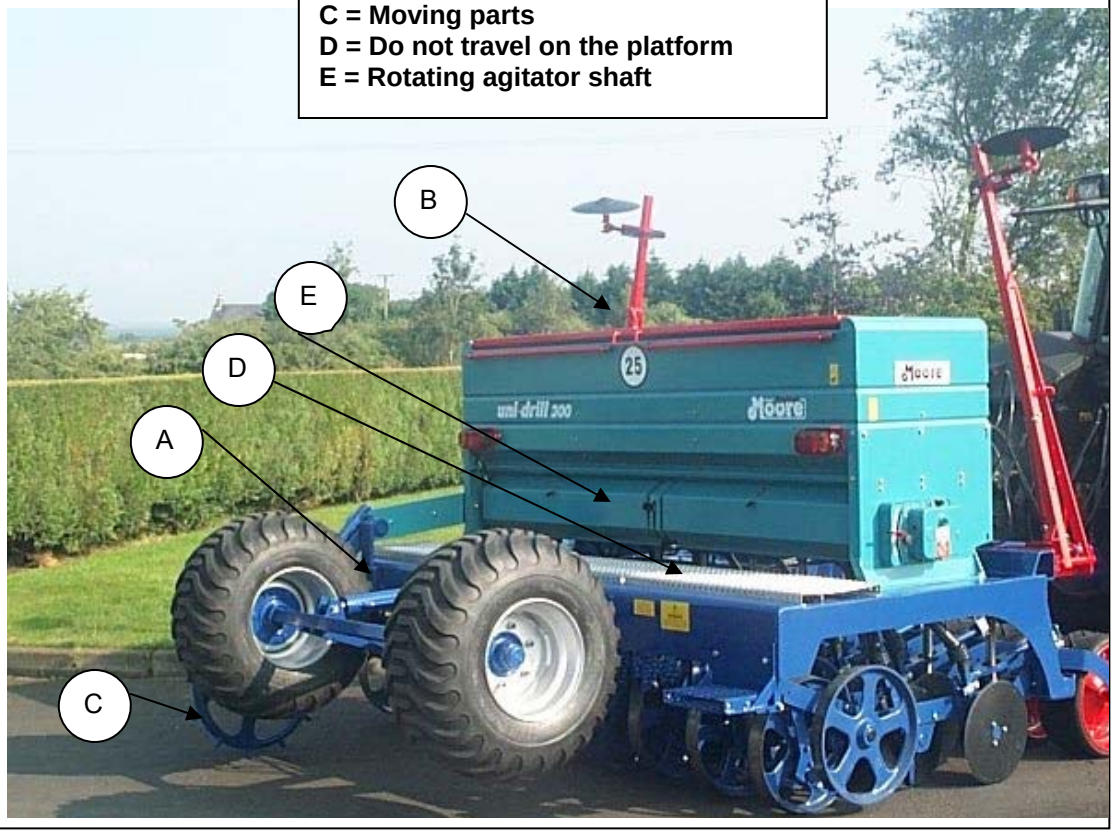

Safety Stickers

Warning notices relating to safety are affixed to your machine.

Their aim is to contribute to your safety and to the safety of others.

Know their contents and check their location.

Review the safety notices as well as the instructions contained in this operating manual.

If any safety notices become illegible or lost they should be replaced.

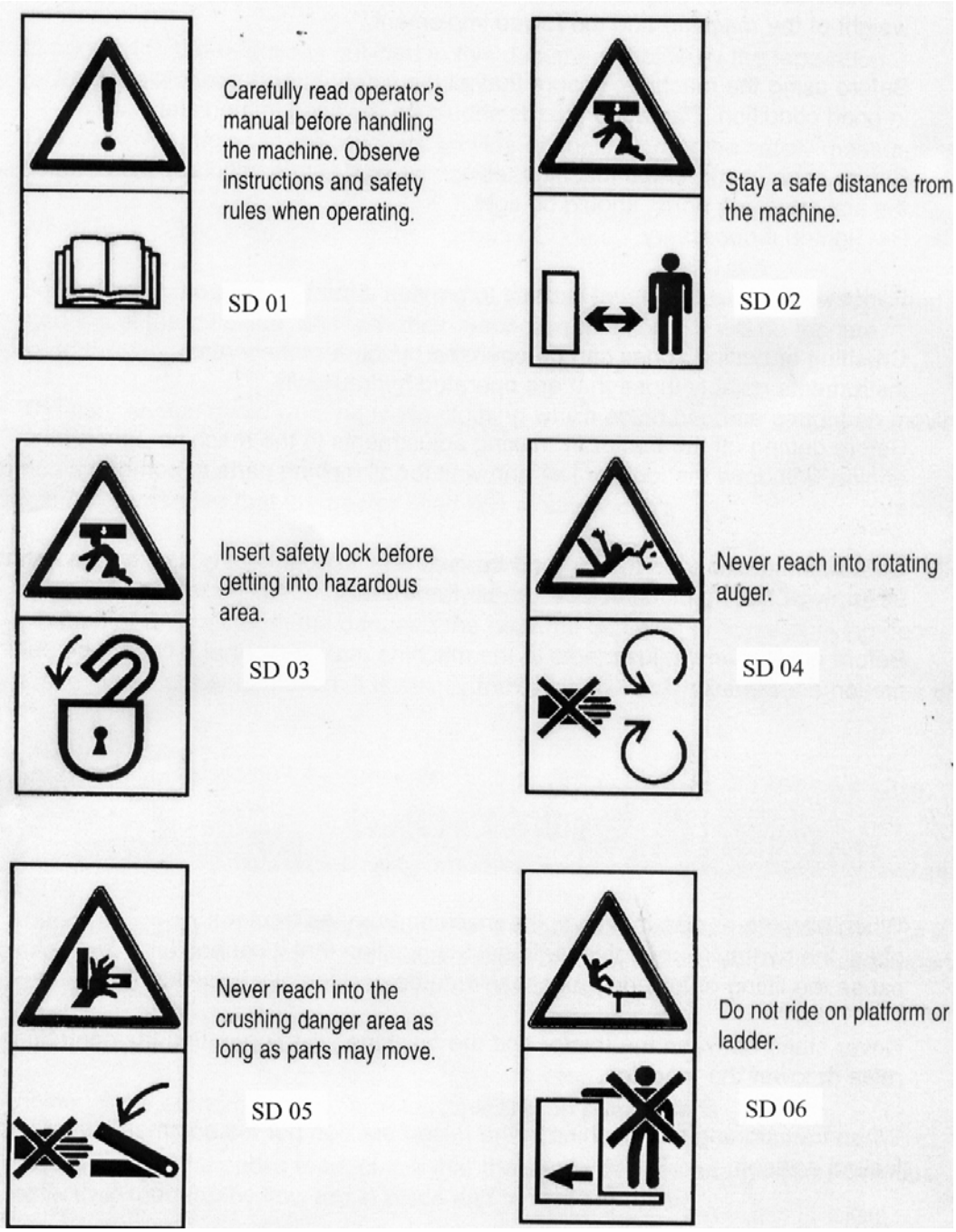

Safety Stickers

SD 07

Tighten implement wheel studs after the first 4 working hours and then daily thereafter

Ensure wheel nuts are tight

SD 08

DANGER

TRANSPORT PINS MUST BE USED BEFORE WORKING ON THE MACHINE WHILST IN THE RAISED POSITION

Ensure transport pins are used when working under raised machine

SD 09

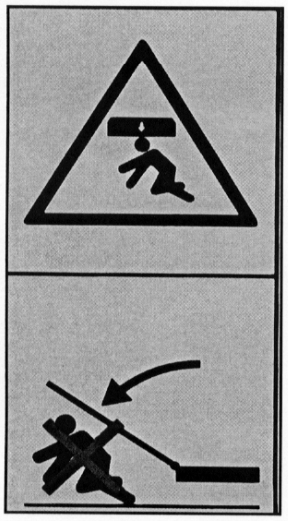

Do not work under raised marker

SD 10

OPERATOR INFORMATION

IT IS THE RESPONSIBILITY OF THE DRILL OPERATOR TO CHECK THE TRAMLINE IS FUNCTIONING IN THE CORRECT SEQUENCE, AFTER EVERY HOPPER REFILL, AND ALSO ENSURE THE TRAMLINE SYSTEM FUNCTIONS IN THE CORRECT SEQUENCE WITH THE DRILLING TRACTORS 12V POWER SOURCE.

Ensure the tramline system is functioning correctly after each fill

SD 11

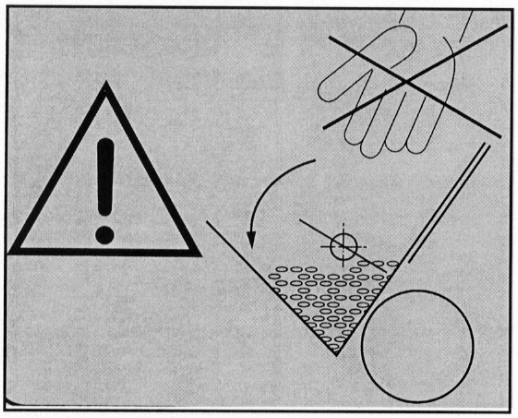

Never reach into rotating auger

SD 12

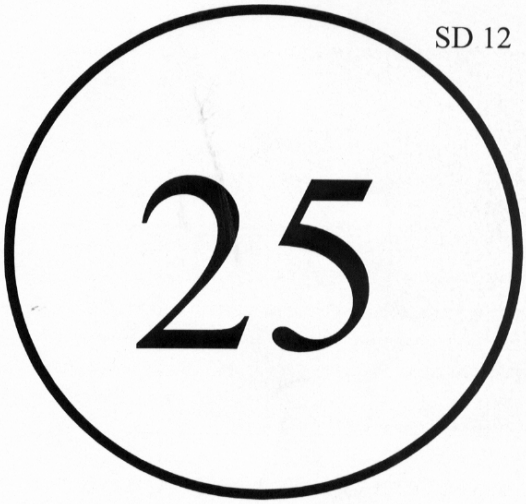

Forward speed should not exceed 25 KPH

Contents

A : Technical Specifications

When accepting ownership of your machine note the following information:

Serial Number:_____

Type of machine_____

Accessories: _____

MOORE UNIDRILL	DP300	DP400
Width (m)	3	4
Number of rows	18	24
Row spacing (cm)	16.6	16.6
Width in transport (m)	3	4
Hopper capacity (l)	1150	1600
Weight (Kg)	3150	3750
Horse Power Required (HP)	100	125

B : Operator Check list

It is the owner / drill operators responsibility to set up the drill for:

1. **Sowing depth according to conditions in each soil type and pre worked condition**
2. **Tramline bout number to suit tramlines**
3. **Tramline track width**
4. **Number of rows shut off whilst tram lining**
5. **Marker width setting to allow matching of bouts**
6. **Operation of half width shut off**

It is also the owner / operator's responsibility to check the operation of the various functions of the machine between each hopper fill, or at least once every hour to check the machine is operating correctly.

C : Hitching

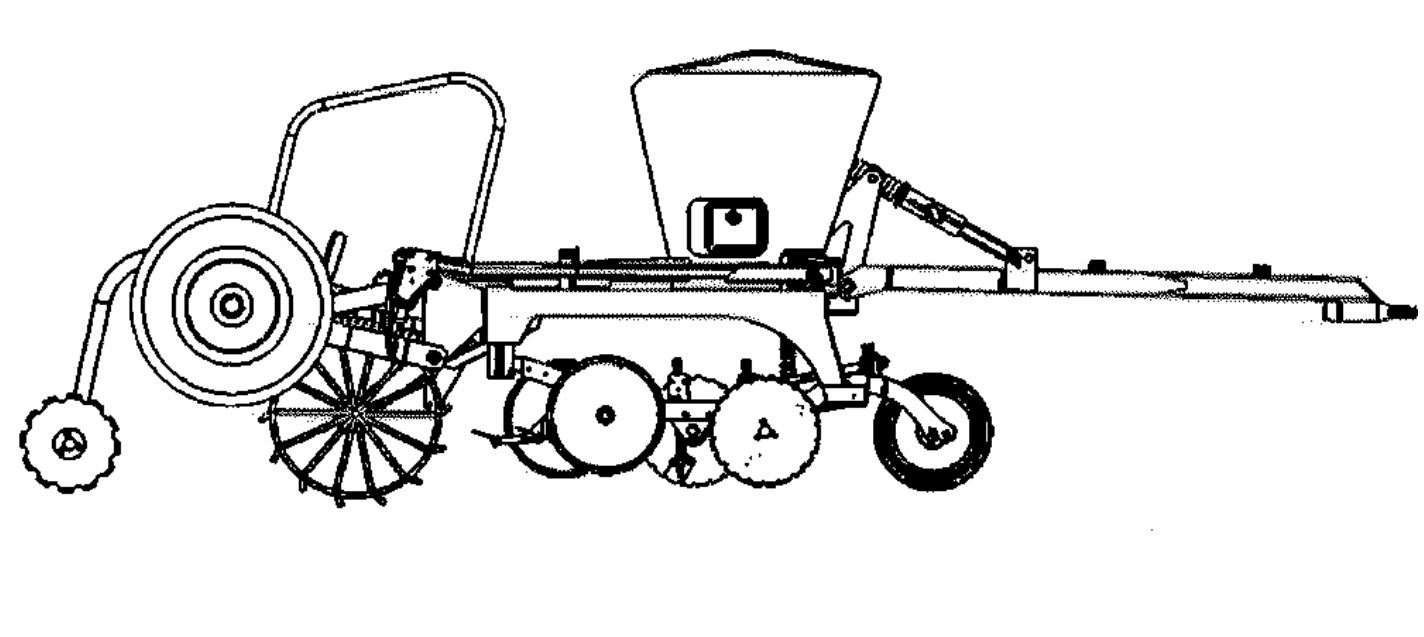

⚠	• To unhitch, set the machine with the transport wheels resting on the ground • Beware of the drawbar motion

1 Hitching height

The height of the hitching point greatly influences the performance of the device (+/- 450 mm).

- The hitching point must be fixed.
- Low hitching heights should be preferred,
- The drawbar should be preferred when twin wheels or wide tyres are used, to make field-end manoeuvering easier.

D : TRANSPORT

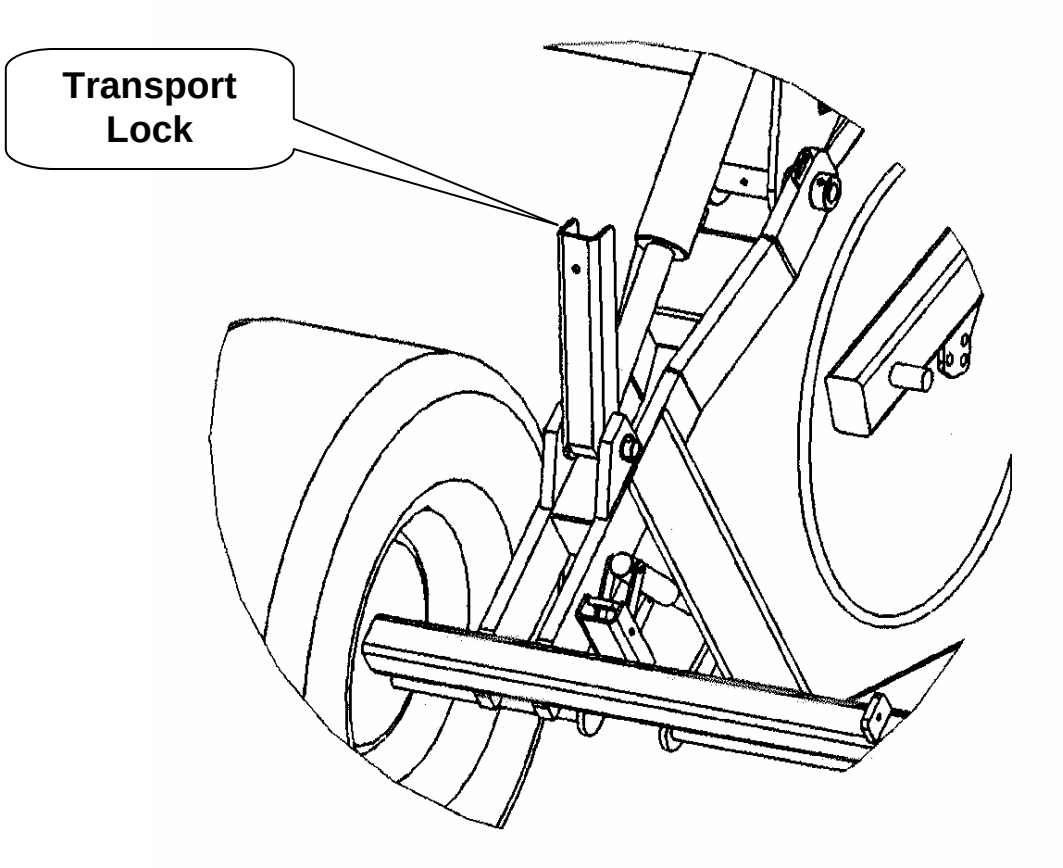

⚠	Users must scrupulously observe traffic regulations on open roads. Travel only with an empty hopper. Users must also use the transport pins when making adjustments to the drill **The Road Transport Speed must not exceed 25 KPH**

TRANSPORT

- Positioning of the transport locks

  - Raise the seed drill
  - Insert the transport locks
  - Lower the machine to rest mandatorily on both transport locks

  Do not stand near the axle during operation

E : HYDRAULIC CONNECTIONS

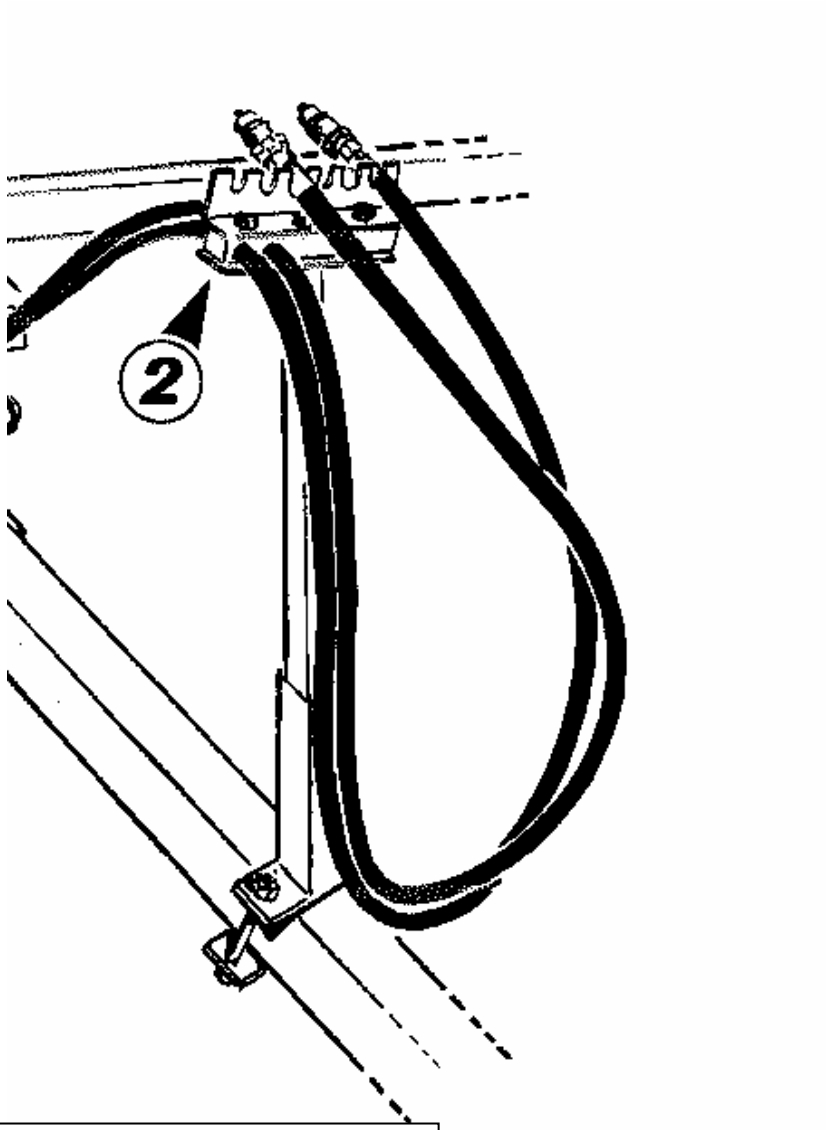

	Pressure lines will have a **RED** cap Return lines will have a **BLUE** cap

Hydraulic connections

<u>For Manual Headland Control</u>

- 1 Double-action spool valve to raise the front ram and axle.
- 1 Single-action spool valve to operate the bout markers.
- Set the hoses on bracket (2).
- Take care to keep connectors clean

F : Filling the seed box

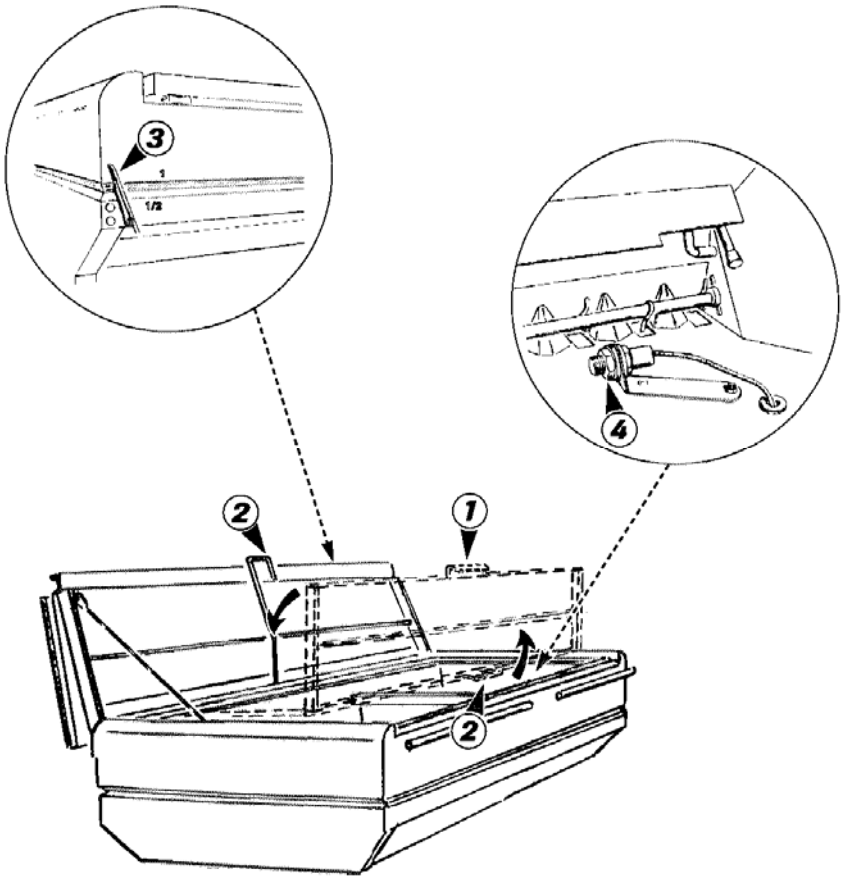

Beware of the rotating agitator shaft. Check that there are no foreign bodies in the seed box. It is recommended not to leave grain inside the seed box to avoid possible damage by rodents. It is strictly forbidden to stand on the drill when operating.

Filling the seed box

- Lower the drill to the ground.
- Use the step and gangway.
- Open the first cover with the handle (1). Place on top of the second cover before opening the seed box completely with the second handle (2).
- Check that there are no foreign bodies in the seed box.
- The seed level can be checked from the driver's position by means of a mechanical level indicator (3).
- With the optional Moore Tronic unit, an adjustable "seed box low" (4) sensor is placed inside the seed box (low position for small grain, high position for large grain).
- **Note:** during seed loading, avoid direct contact with treated seed and wear a dust-mask.

A : Distribution Settings

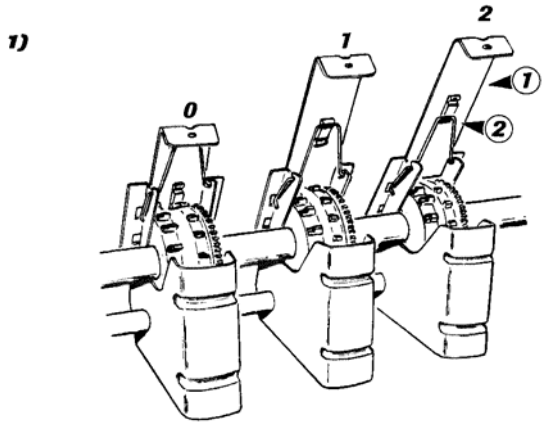

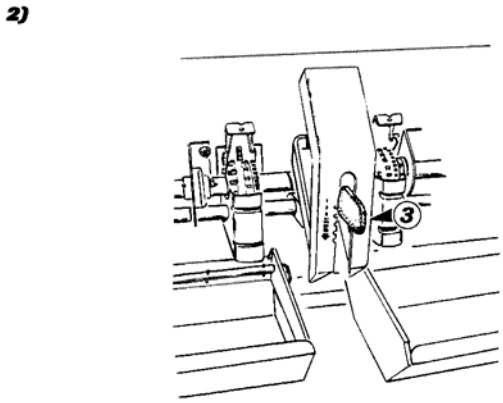

a) Distribution settings (please refer to page **39** for settings)

1) Distribution shutter

- Raise or lower the shutter (1) according to recommendations. Insert the spring (2) into the appropriate catch.
- 3 opening positions are available for the shutter.
- Marker **0**. Closed (when sowing one row in two, for instance)
  1. Small seeds < 8 kg/ha
  2. Large seeds

2) Base flap

- Move the lever (3) slightly to the right and position at the appropriate marker.
- Marker **1**. Cereal
  2.
  3.
  4. Peas for canning
  5. Peas
  6. Beans
  Max. Lower position, hopper emptying

- The aim is to have the seeds metered out by the peg wheel with the base flaps open as little as possible (e.g. marker 1 for wheat and barley). However, if you notice constant projections of seeds from the distribution system, position the lever one marker above the recommended setting (e.g. marker 2 for wheat and barley).

A : Distribution Settings

3)

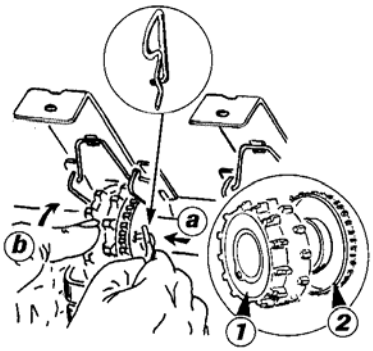

4)

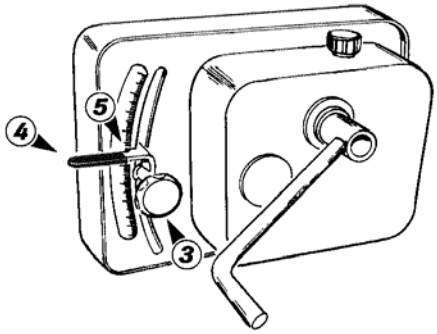

3) Selecting the peg wheel

(1) Standard wheel for cereal and large seeds.
(2) Fine wheel for small seeds

o Take hold of the pin located on the shutter of the first unit to the right

- To select the distribution wheel:

(a) Press
(b) Turn

4) Variator

o Using the knob (3) and the lever, position the marker according to the results of the calibration test (4).
o Read the setting above the flat part (5).
o Each marker change must be followed by a calibration test. For your information, 3 graduations on the adjustment scale equal a 10 kg/ha increase/decrease with cereal.
o Scale range from 0 to 90.

A : Distribution Settings

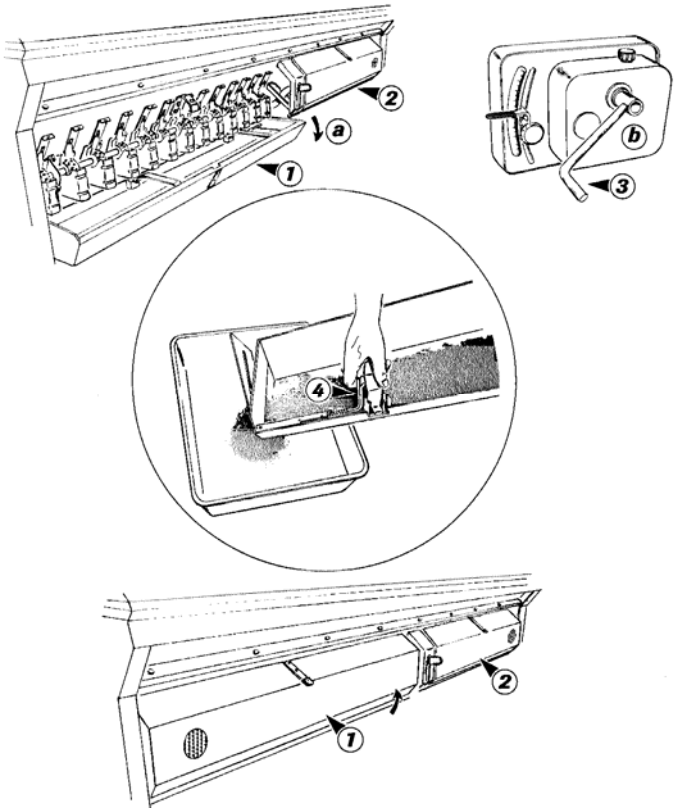

Very precise sowing requires a calibration test. Make sure your scales are accurate.

Preparing the calibration test

- o Use accurate scales and a container.
- o Before carrying out the test, check that no-one is standing near the seed drill.
- o Procedure

  a). Open trays (1) and (2) and push them downwards in order to lower them below the distributions.
  b). Fit the calibration handle (3) onto the variator shaft.

- o Check that the distributions in use are engaged.
- o Perform your calibration test according to the recommendations issued in the following pages.
- o To empty the seeds from the tray more easily, open the flap by slightly lifting the lever (4).
- o Raise the trays back into guard position.

A : Distribution Settings

1

Colza Rape Raps	1	1	2
Luzerne Lucern Luzerne	1	1	1
Ray grass Rye grass Gras	1	1	1
Blé Wheat Weizen	2	1	1
Orge Barley Gerste	2	1	1
Pois Peas Erbsen	2	5	1

2

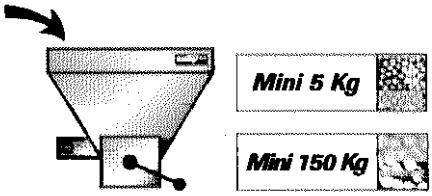

3

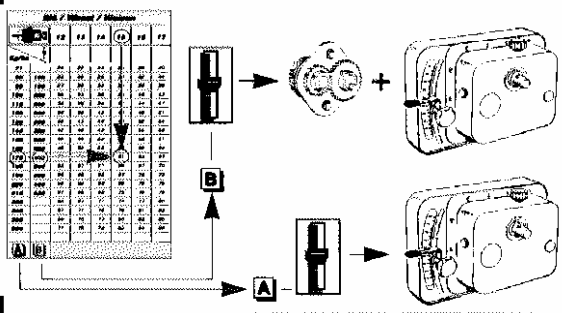

4

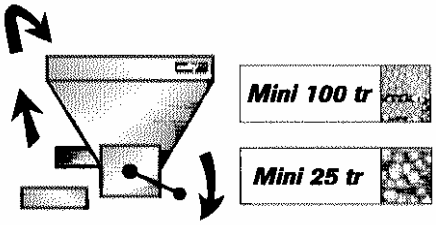

5

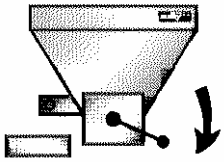

m	2,50	3,00	3,50	4,00	4,50	4,80	5,00	6,00	6,66
tr	60	50	43	37,5	33,3	31,25	30	25	22,5

6 - 7

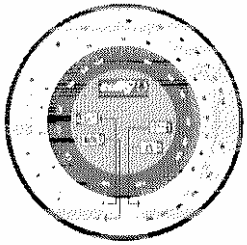

ou - or - oder

x 40 = Kg / ha

8

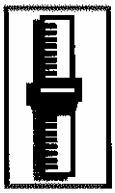

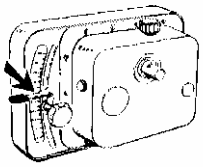

9

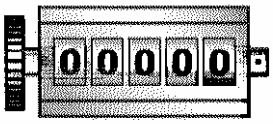

ha = 0

10

5 + 6 + 7

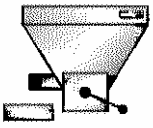

A: Distribution Settings

Carrying out the calibration test

1) Fixed unit test

1 Set the distribution as indicated in the manual (plugs, baffle, plate, shutters etc.).

2 Put the grain in the seed box **on the day of sowing** (5 kg of rape, 150 kg of cereal) and carry out the following test.

3 **Set** the variator to the mark indicated in the table (see section 5).

4 **Start** distribution: a **minimum** of **25 turns** of the crank (the trough may be filled), or **100 turns** for rape.

5 **Carry out** the test by completing the appropriate number of turns for the width of the seed drill. **N B** Turn steadily at **1 turn per second.**

6 **Weigh** the quantity collected in the trough using accurate scales.

7 **Multiply by 40** to obtain the quantity per hectare or use the calculator (see next page).

8 **Correct** the variator setting (lower the lever completely then bring it back up to the required value).

9 **Reset** the area meter to zero after the calibration test.

10 The most representative test is one carried out under real working conditions.

After sowing a hectare, carry out a further check (proceed as above from step **5**).

Checking the distribution system

Distribution of seed to the seed tubes should be checked at regular intervals through out the day, for example every hour.

- Check both sides of the drill appear to be delivering the same amount of seed to each coulter.
- Manually turn the drive wheel with the fan running to ensure seed is blown out of each coulter.
- Engage tramline mechanism and repeat the above procedure, Note the voltage the tramline system receives from the tractor affects the way in which the tramline will work***. IF THE TRACTOR IS SUPPLING AN INVERSE POLARITY VOTAGE TO THE TRAMLINER, THE TRAMLINE MECHANISM WILL WORK IN THE OPPOSITE MANNER ,i.e TRAMLINE WHEN IT SHOULD'NT AND NOT TRAMLINE WHEN IT SHOULD***
- When calibrating the seed box check each side of the drill is delivering the right amount of seed.

A : Distribution Settings

SLIDE RULER

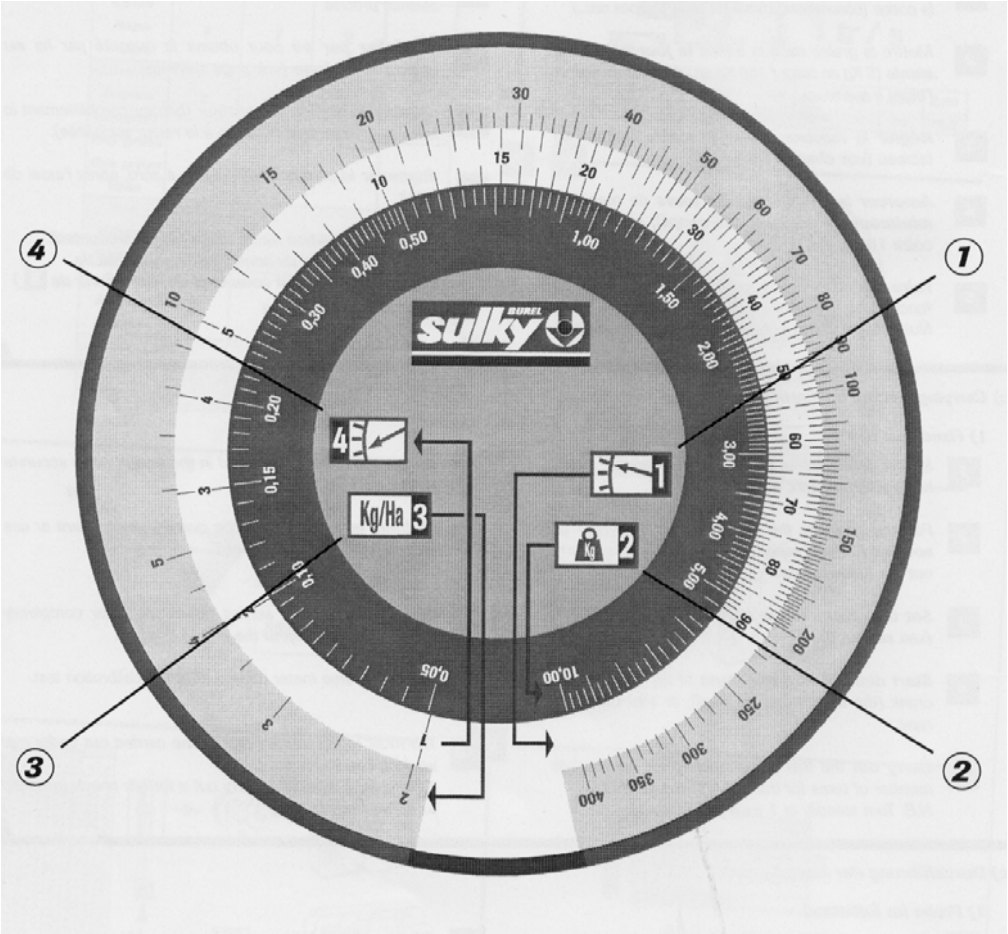

Test using the slide ruler

- This slide ruler enables you to determine the new variator index after the first flow rate test.
- Adjust distribution settings and carry out a test according to the recommendations contained in the preceding pages.
- Operation:
  - Set line (1) of the variator index used for the first flow rate test on line (2), which corresponds to the amount in kg collected in the tray during that test
  - Without moving the slide ruler discs, find the target flow rate in Kg/ha on the line (3)
  - On line (4), read the new variator index corresponding to your seed and conditions
- After sowing one hectare, perform another verification test.
- If you want to change the rate/ha with the same seed but on another plot, use the slide rule to determine the new variator index from the weight value of the first flow rate test.

B : Sowing Depth

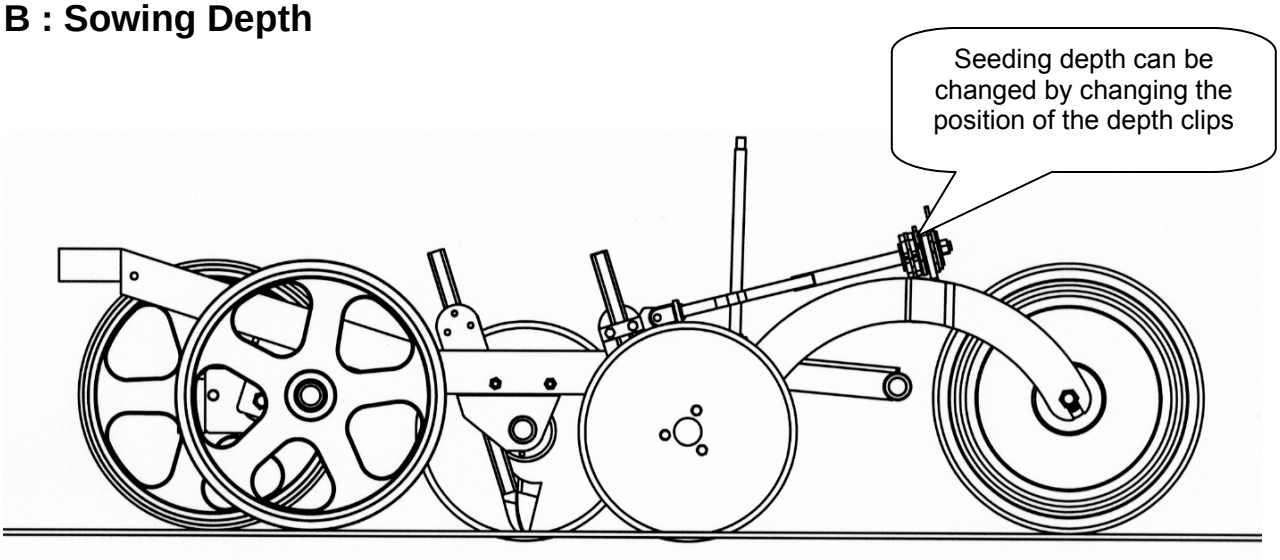

By moving depth clips from the **'A'** side to the **'B'** side and vise versa the seeding depth can be adjusted

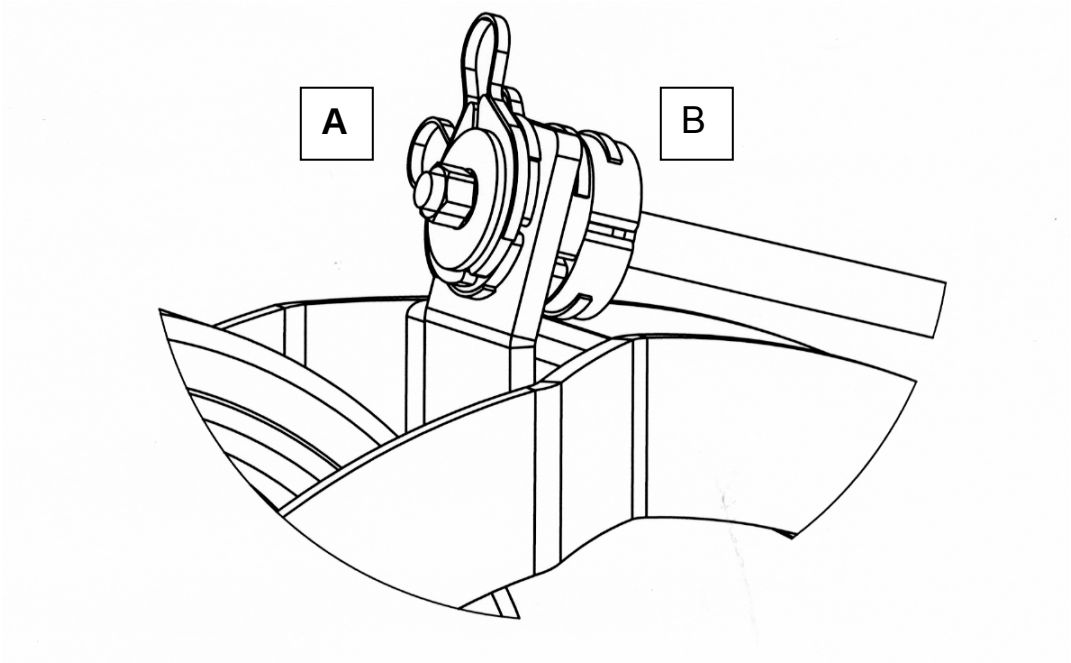

The table on the right shows how it is possible to get a range of depth stages from the depth clips

'A' side	'B' side	Depth stage
¼",1/4" 1/2",1"		**1 (Deep Sowing)**
¼",1/2",1"	¼"	**2**
½",1"	¼",1/4"	**3**
¼",1"	½",1/4"	**4**
1"	¼",1/4",1/2"	**5**
¼", ½"	¼", 1"	**6**
¼", ¼"	1",1/2"	**7**
¼",	¼",1/2",1"	**8**
	¼",1/4",1/2",1"	**9 (Shallow Sowing)**

The sowing depth should be checked regularly throughout the day, for example every 4 hectares. Check sowing depth midway between tractor tracks, within a tractor track and at each side of the seed drill.

C : Weight Transfer

Using the front ram, it is possible to transfer weight, onto the front or rear press wheels, this is done by inserting stroke control segments onto the front ram to limit its stroke.

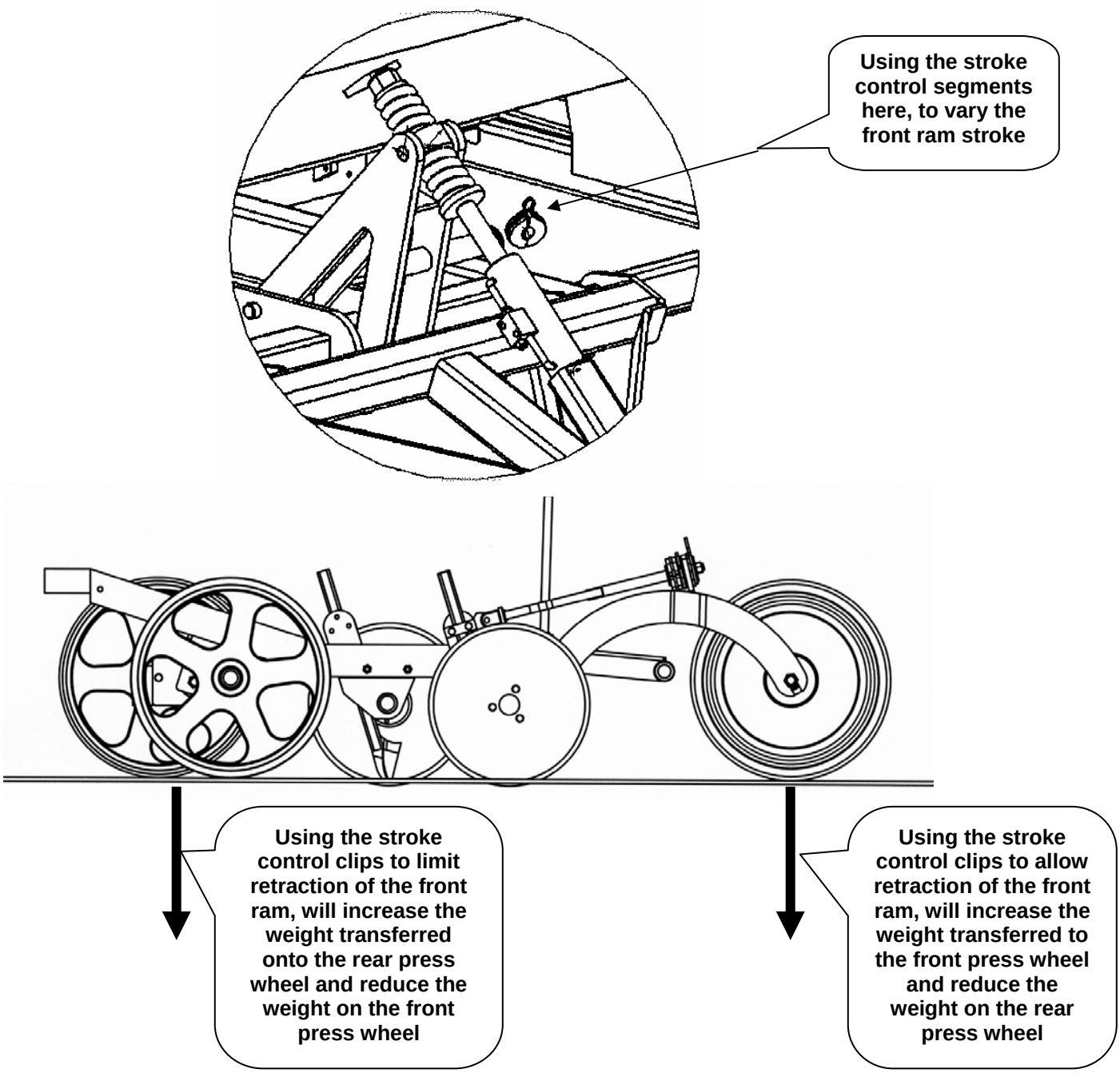

D : COULTER ADJUSTMENT

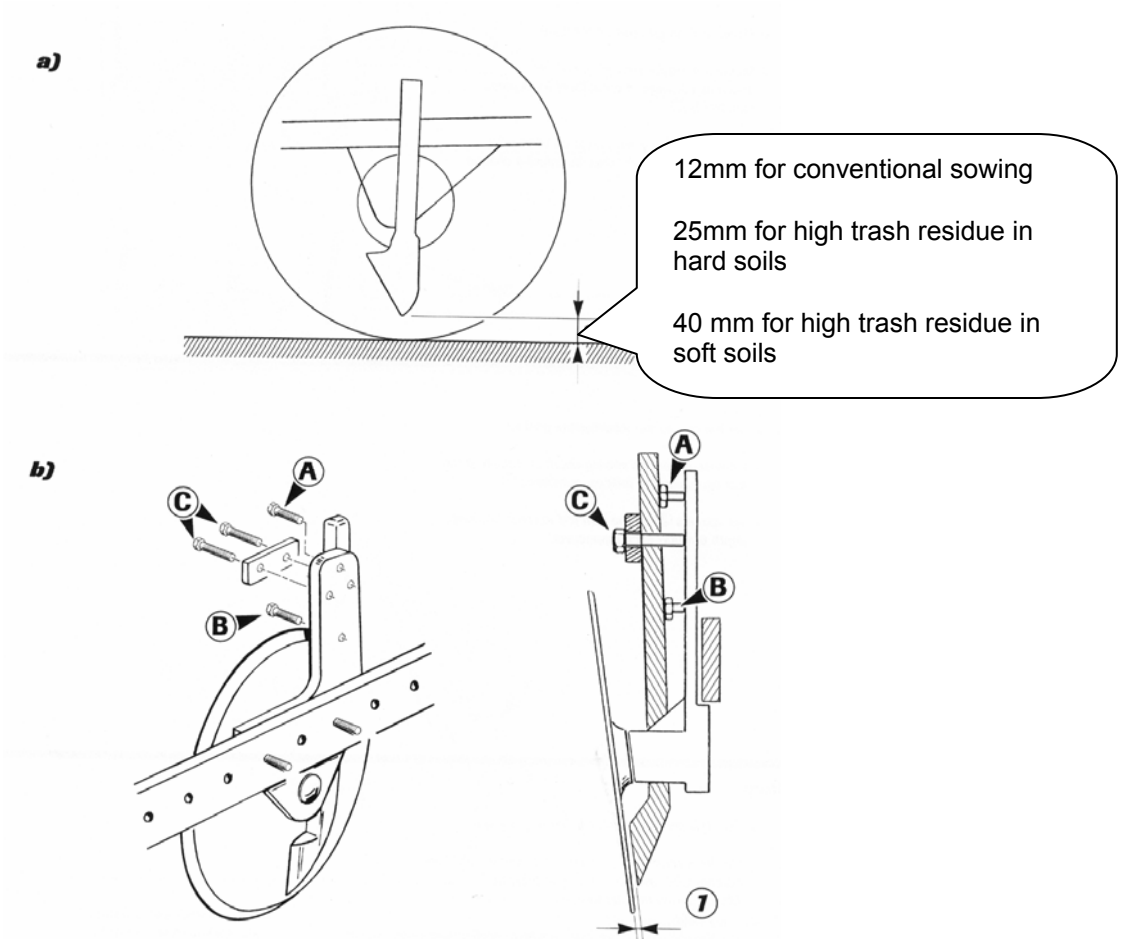

Coulter adjustment

a) Adjusting coulter height:

The tip of the coulter is approximately 20 mm above the disc edge for drilling in high trash volumes, it should be set 12mm above the disc edge, when being used in conventional seed beds.

- This is the minimum clearance that must imperatively be observed to protect the coulter from impacts
- Adjusting that clearance is easy, the machine being set on a flat and level area with a block under the coulter

Note: When operated on very soft soil encumbered by trash, it is recommended to raise the coulter to 40 mm above the disc edge to facilitate disc motion.

b) Recline adjustment:

The coulter (1) leading edge should be:
- Parallel to the disc
- As close as possible to the disc but not hampering its rotation

Should the discs jam, coulter adjustment is necessary. Use screws A and B to set the coulter closer to or further from the disc.

Ensure that the coulter leading edge is parallel to the disc:

- Use C screws to adjust parallelism by swiveling the coulter around A and B screws

E : Markers

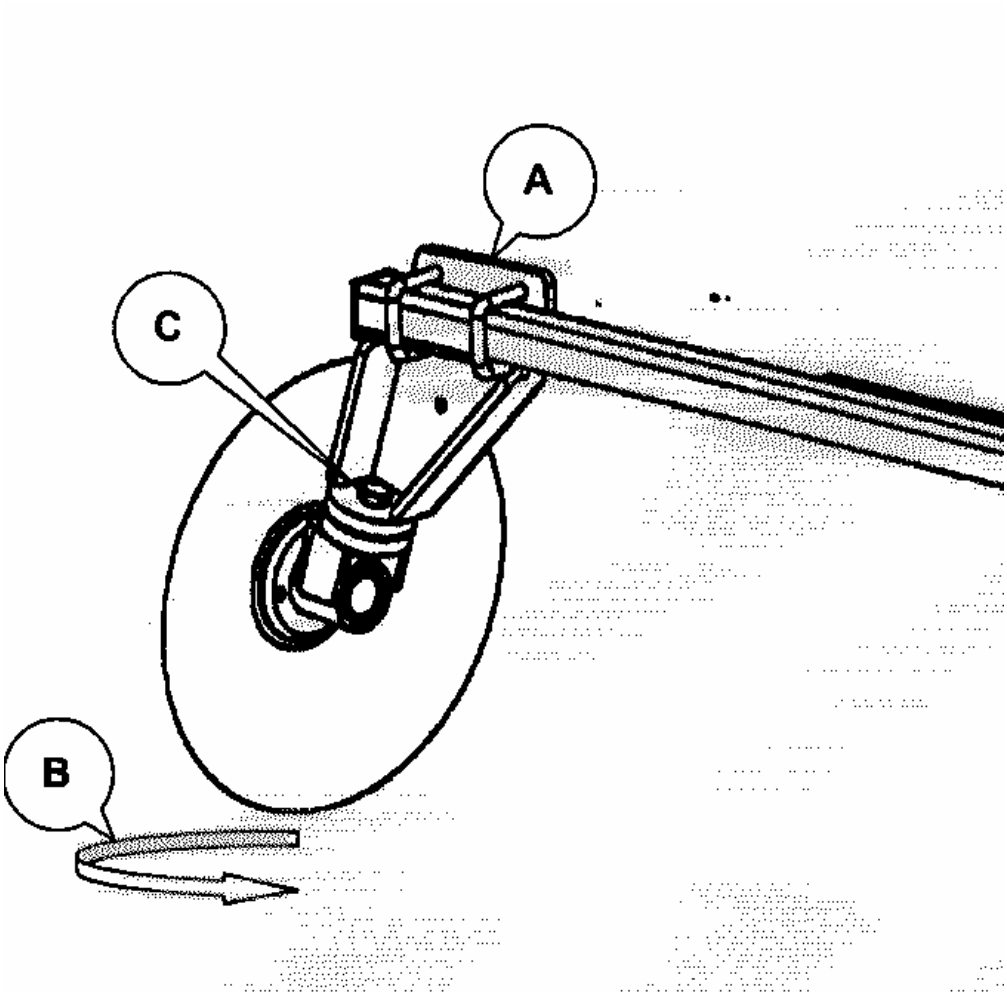

Setting Markers to working position

Markers are designed for marking the tractor centerline.

Markers are pre –adjusted in the factory, but they need to be checked in the field, if adjustment is required move the disc bracket (A) along the tube

The distance between the first sowing row and the marker disc equals ½ sowing width plus ½ the seed row spacing, which is 83mm

The disc angle (B) can be changed by loosening bolt (C) and increasing the disc angle to get the desired marking intensity.

Secure the side markers for transport, withdraw the oil pressure before unhitching the seed drill

E : Markers

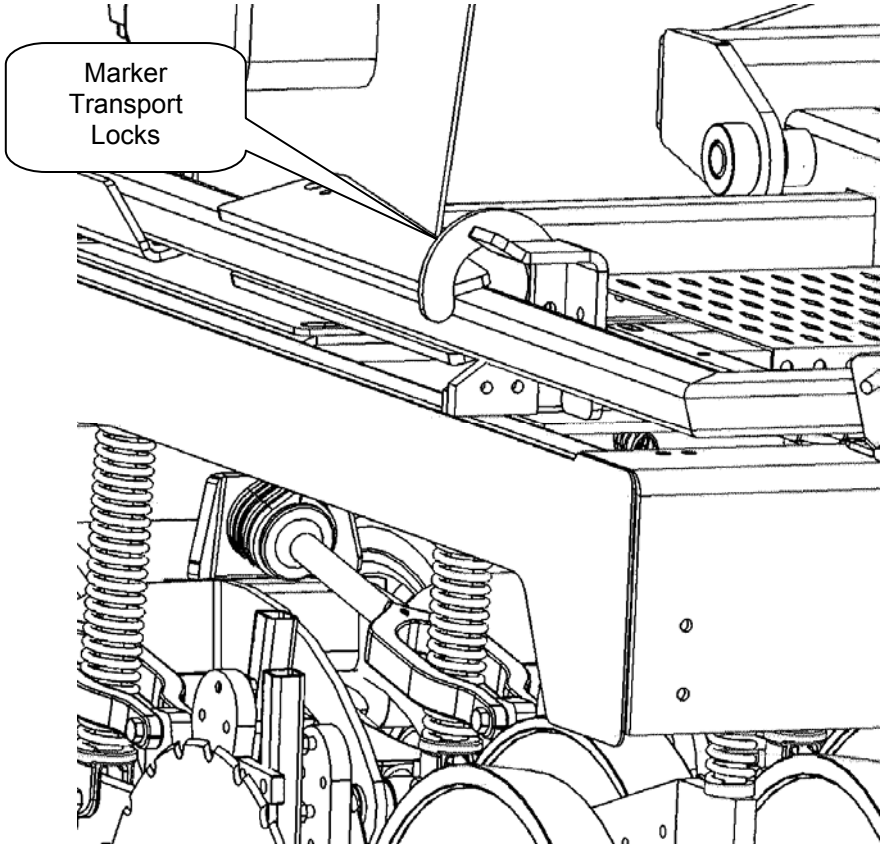

Safety

Always make sure the marker transport locks are in the position shown above when transporting the machine on the highway

Operation

1. Apply spool lever – both markers are retracted
2. Apply spool lever opposite direction – bout marker extends
3. Apply spool lever back again _ extended bout marker retracts
4. Apply spool lever opposite direction _ other marker extends

The markers should be operated in a gentle manner, beware of obstacles when drilling, turning at the headlands should be carried out with the markers in the folded away position

F : Half Width Shut off

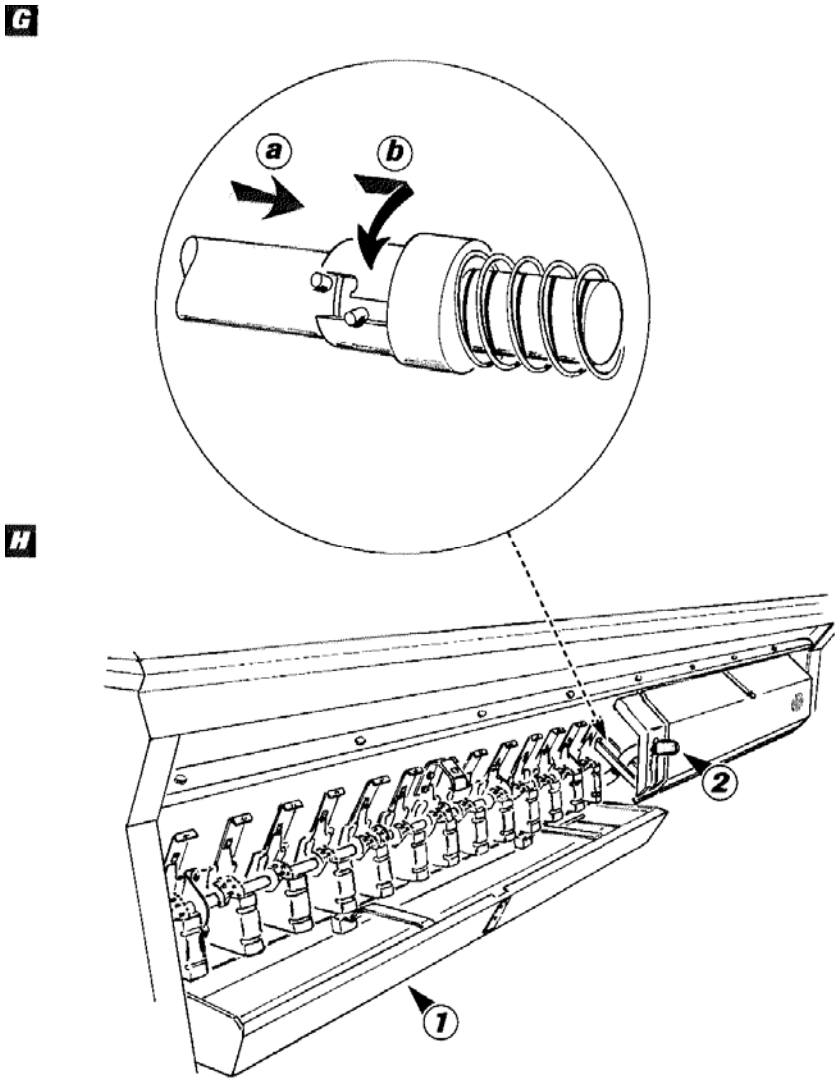

The hopper must imperatively be emptied after sowing to avoid any damage caused by rodents

G Disengaging half the seed drill

- The central coupling between the distributor half-shafts can be uncoupled in order to match the current tramlining setting. Only the left-hand side can be disengaged.
- To disengage
  - A. Press
  - B. Turn

H Emptying the hopper

- Empty the hopper into the tray (1).
- Lower the trays beneath the metering device and push the lever (2) down fully.
- To interrupt the seed flow when the hopper is only partly empty, raise the lever very slightly, without raising it to its upper position.

G : Electronic Tramlines

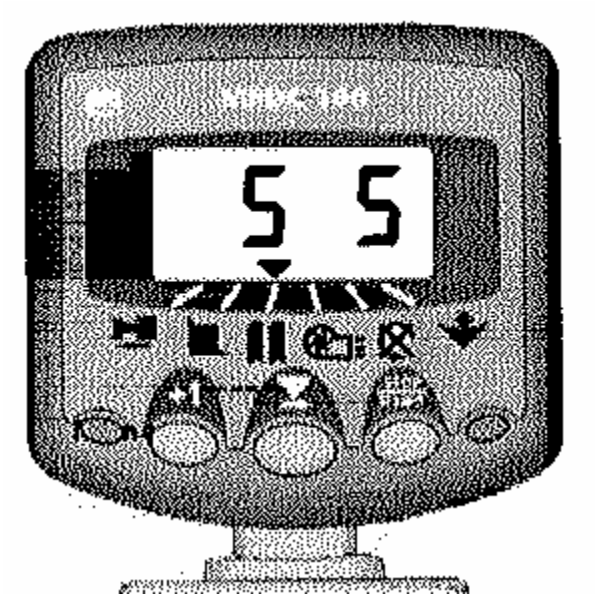

See the attached booklet for Instruction for using the Mooretronic drill control

The electronic tramliner disengages 2 or 4 seed flow outlets to form tramlines to facilitate further crop treatments

The table below shows typical tramline rhythms for different widths of tramline bouts

Drill (meters)	Width of Sprayer	Half drill shut off for tramlining	Target Bout	No. of bouts to start tramline
	9	No	3	2
	12	Yes	4	2
3M	15	No	5	3
	18	Yes	6	3
	21	No	7	4
	24	Yes	8	4
	12	No	3	2
	16	Yes	4	2
4M	20	No	5	3
	24	Yes	6	3
	28	No	7	4
	32	Yes	8	4
	36	No	9	5

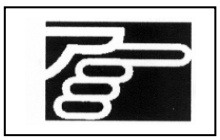

When using half width shut off begin on the right of the field. Don't forget to re – engage the half width shut off before the second drilling bout

H : Tramline Track Width

The tramline track width is not set in the factory. This will have to be set to correspond with your own sprayer.

Please make the following measurements

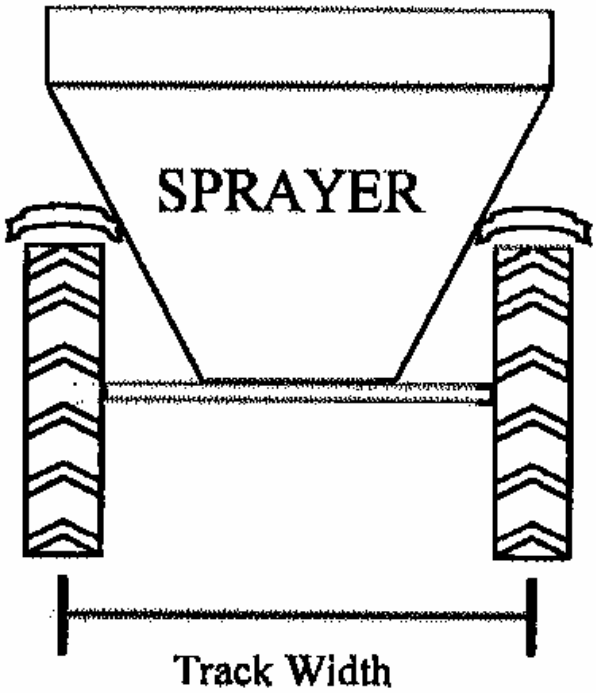

The above measurement can then be used to determine the coulters on each side of the drill that will allow a tramline track width approximately equal to your sprayer track.

Take one half of the sprayer track width, and use this measurement from the center of the drill to determine the coulters that will be used to tramline. Repeat this procedure on the other side of the drill.

The selected coulters must then be attached to the tramline pipes on either side of the drill.

Please ensure that if the seed pipes are changed onto different coulters they have sufficient length for working position as well as transport position.

A : Wear Check

e)

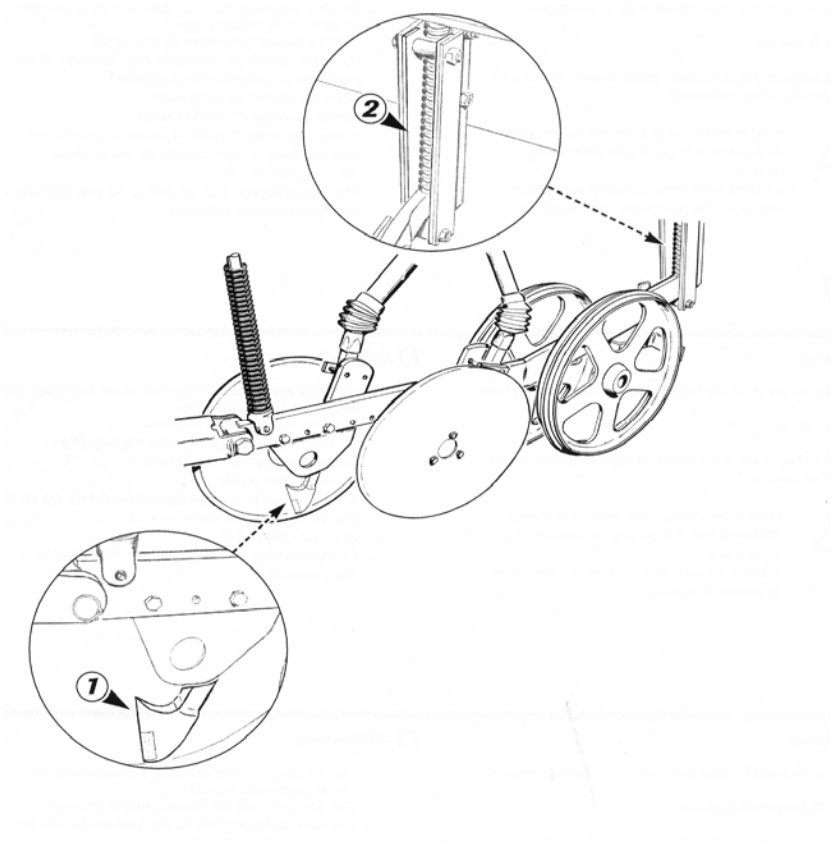

These checks should be regularly repeated, especially when the seed drill has been used on hard or stony soil.

e) **Checks**

Wear check
- of coulters (1)
  Coulters are the essential furrowing part and must retain aggressive shape. Coulters can be rebuilt with suitable welding rods before wear becomes too pronounced.

- of seed drill arm rear guides (2)
  NEVER LUBRICATE.
- turn or replace the plates as soon as their thickness is significantly reduced.

Tightening check
- After 10 hours of operation:
  Check the tightening of the furrowing system screws: disc securing screws and check tapered roller bearings.

If those roller bearing have play, they should be tightened:
- Remove the dust cover
- Tighten the nut until the disc rotates forcibly
- Release the nut by ¼ turn
- After 20 hours of operation : Check the tightening of the main nuts.

Periodically check wheel rim tightening and tyre pressure:
Tyres – 400/60 – 15.5 (DP300): 1.5 bar
- 19.0/45 – 17 (DP400): 1.75 bar

B : Seed Distribution

f)

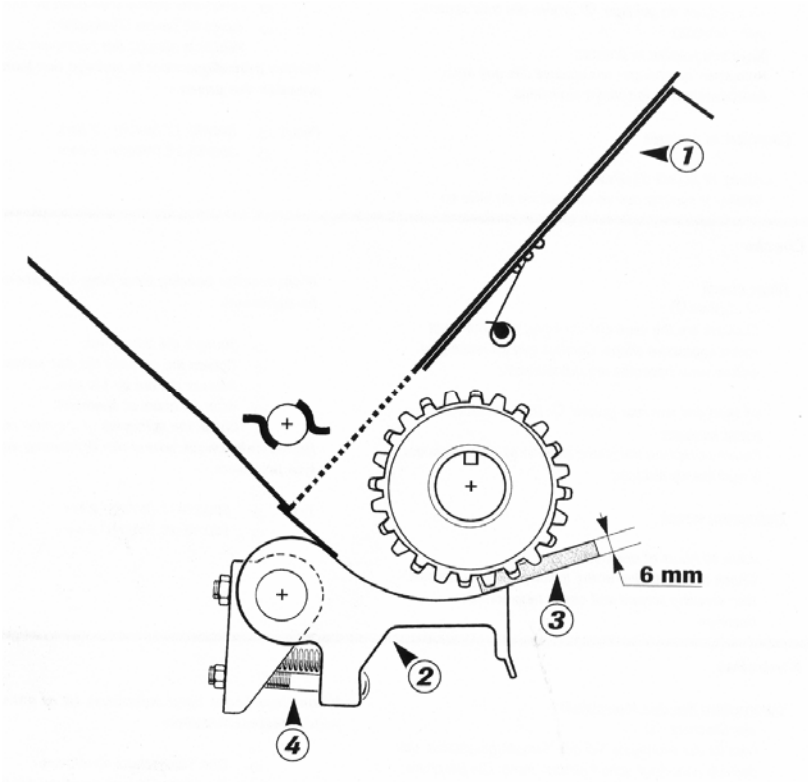

f) **Metering devices**

- Never leave seed for any length of time in the hopper
- Open shutters (1) and flaps (2) during the storage period
- Never lubricate or grease metering devices and seed pips
- Checks – Incorrect setting of flaps (2) may induce oversowing in the course of work.
  It is recommended to check and adjust if necessary after each sowing period-
  -Set the flap lever to index 1
  -Begin with visually assessing the distance between the flap and the peg wheel
  -If necessary, insert a 6mm spacer (3) between the flap and large space peg wheel.
  Adjust the distance with screw (4).

C : Greasing and Lubrication

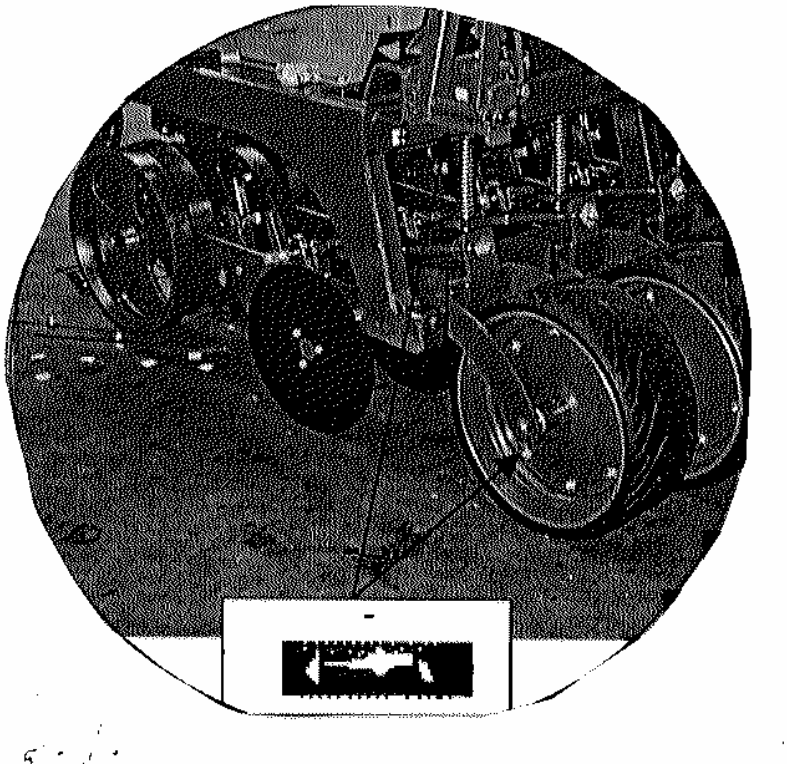

- Lubricate the sowing equipment regularly at the beginning and end of the sowing campaign
- Grease the front Otico press wheels every 120 hours
- Lubricate markers every 20 hours
- Oil tramline springs with spray releasing oil
- Oil distribution chains
- Check variator oil level [horizontal seed drill],top up the red dot with ATF – DEXTRON II D
- Change oil every 500 ha or 2 years if the area has not been covered.

A : Multiplier

g)

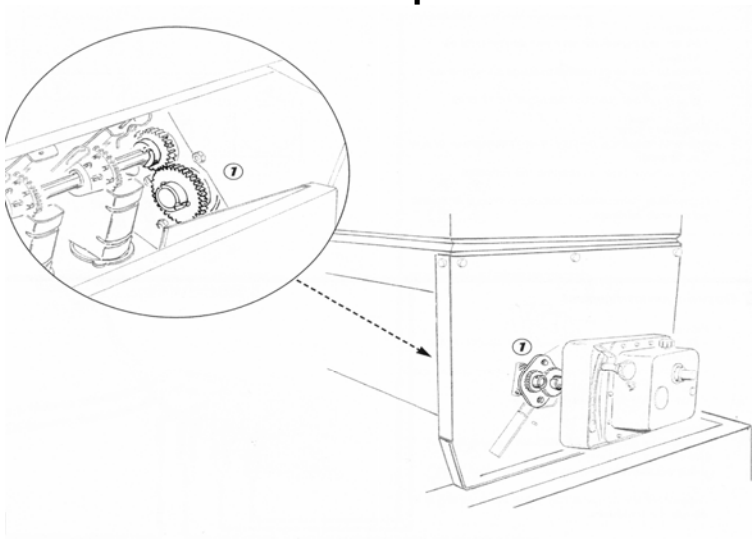

h)

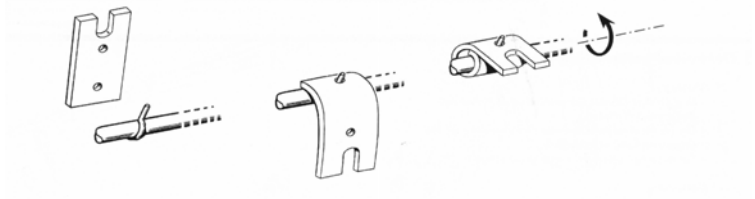

Follow the mounting instructions

g) Variator rate multiplier
- Multiplier (1) is to be used for high-speed operation (≥ 12 km/h) with high seed rate.

Fitting

- Remove the variator (3 screws accessible through the hopper)
- Remove the couplings
- Fit the multiplier from the outside
- Check alignment and tighten the multiplier and variator securing screws.

Operation

- In relation to baseline settings, the flow rate is doubled.
- Follow the column [B] in flow rate tables.

h) Flexible agitator
- Use the flexible agitator with very poorly flowing seed, eg, Ray grass

Fitting

- Hold the rubber flap and roll it around the agitator finger according to the diagram
- Beware of the rotating direction

C : Pre – Emergence Marking

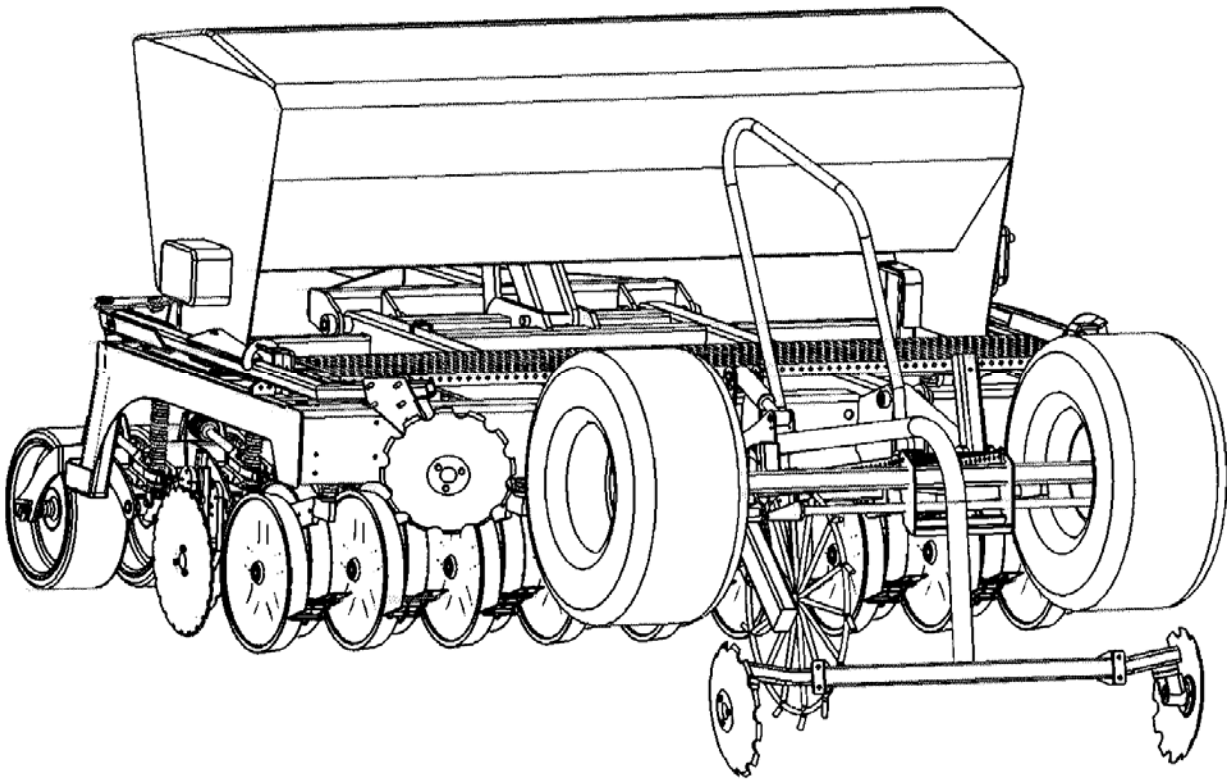

- Pre – Emergence discs operate simultaneously with post – emergence marking out. (Tramlines)
- The marking out track must match that of the disengaged rows
- Ground marking is adjusted by letting the discs “catch” more or less soil.

It is recommended to let the disc “catch in the edge of the first seeded row, so as to project soil

Practical Recommendations

HOW TO PREVENT COMPACTION

1. **Generalise the use of low-pressure tyres on field equipment to restrict surface compaction.**
   Fitting wide tyres or twin wheels is not enough; pressure has to be adapted.
   The target is 0.6 bar, in agreement with the tyre manufacturer. When in tow, UNIDRILL does not load the rear wheels of the tractor and weights are not needed in the front!

2. **Reducing axle load to reduce deep compaction.**
   The target load is 6 tonnes per axle; leave all heavier loads on the track. Light tractors are preferable; UNIDRILL is perfect for moderate power, hence lighter tractors.

3. **Working on dried-out soil.**
   Be patient and wait for the right moment to intervene. According to researchers, the soils resists better to compaction as soon as its surface changes colour. After 4-5 years of conservation tillage, the soil drains water faster and becomes more bearing, which reduces waiting.

4. **Bring calcium and magnesium supplements to compensate medium acidification.**
   Aim to maintain pH between 6.5 and 7 to ensure good stability of the clay-humic complex.

5. **Enrich the soil with organic matter to protect it from compaction and improve resistance.**
   Return straw and harvest residues, bring manure, grow forage, avoid plowing…

HOW TO BURY STRAW

1. **Select the right variety.**
   Depending on variety the amount of straw produced varies, as does its resistance to impact. A disease-resistant variety that does not necessarily need end-cycle fungus protection will also be more vulnerable to decomposition agents.

2. **Fit and adjust the combine.**
   Faster rolling and beating breaks down straw more. Well dried, straw is more brittle: harvest those plots first. Fit the harvester with a small straw distributor. Shred the straw in 5-6 mm bits (sharpen the shredder blades, tension the belts…) and distribute it evenly.

3. **Shred straw and thatch behind the harvester.**
   In particular, when catch-crop is short, cutting high and straw poorly distributed, when planning to use a toothed tool…

4. **Thoroughly mix the straw in the soil and press.**
   Do not exceed 5-6cm in depth to facilitate decomposition and not to dilute residues. Pressing with a heavy roll promotes soil/straw contact and decomposition agent action.

HOW TO FEND OFF SLUGS

1. **Plough up stubble early to restrict slug feeding sources.**
2. **Work surface soil rather finely and press to upset and make slugs uncomfortable.**
3. **Keep soil clean by mechanical and chemical destruction and sow early.**
4. **Detect the presence of slugs upon the first rainfall and set traps.**
5. **Sow a little deeper and under fast-emergence conditions.**
6. **Properly close up the sowing furrow, possibly roll. In a risk situation, treat with an appropriate agent.**
7. **Carefully monitor growth after sowing, especially under humid conditions.**
8.

HOW TO FIGHT WEED

1. **Setup conservation tillage only in clean plots**
   In particular, perennial weeds should be controlled during the preceding crop.

2. **Plan fighting weed within the cropping cycle.**
   Alternate cereals with dicotyledon plants (peas, rape, beet…) as well as winter and spring crops. Take advantage of dicotyledon crops to take effective action against graminaceous weed, and of cereal crops to destroy dicotyledons.

3. **Perform blank sowing between crops to get rid of annual weeds and regrowth.**
   Upon combine passage, prepare a bed of homogenous seed with fine, superficial and pressed dirt to obtain an even and as comprehensive emergence of weed seeds as possible. A week before sowing, destroy the emerged plants mechanically or with a total non-remanent weed killer

4. **Do not sow too early to optimize blank seed effectiveness.**
   The longer the catch-crop, the more effective the weed killing. Sow the foulest plots last. Trust the swiftness of UNIDRILL action and the quality of its emergences and sow on schedule without any risks.

5. **Setup a clean and strong crop upon sowing**
   Use clean, weed-free seed with high germination potential. Lay the seed to obtain fast and grouped emergence, competing with weed.

6. **Use a seed drill that moves little soil, like UNIDRILL**
   UNIDRILL only works the seed row, thus reducing the risk of blank-seed-escaped seed emerging. Wide intervals between rows are preferable, like those of the UNIDRILL (16.6cm). Only use the seed drill near harrow when necessary.

7. **Closely monitor flora evolution during growth**
   With conservation tillage, usual weeds no longer occur in the same amounts and on the same dates; furthermore, other species may occur. Be prepared for that evolution by updating your botanical knowledge. Do a weekly tour of growing crops, progress through plots along large W-shaped patterns, identify plants and their growing stage, take notes and keep a record for each plot.

8. **Vary the weed-killer chemical family from one year to another.**

9. **Trim borders, fallows and crops before seeding.**

   Mow, shred embankments, borders, ditches, fallows rather than applying total weed-killers; this could lead to perennial weed selection and make them hard to eliminate. Some prefer growing Ray-grass on borders; it smothers weeds and is easily controlled with a mower. In crops, destroy residual weed patches by tropical treatment with a regular spraying equipment or manual atomizer.

10. **Avoid disseminating weed seed at harvest.**
    Start with cropping the cleanest plots. In weed-infested plots, crop the cleanest parts first. Clean the combine after each passage in a fouled plot.

Reminder of Pre Settings

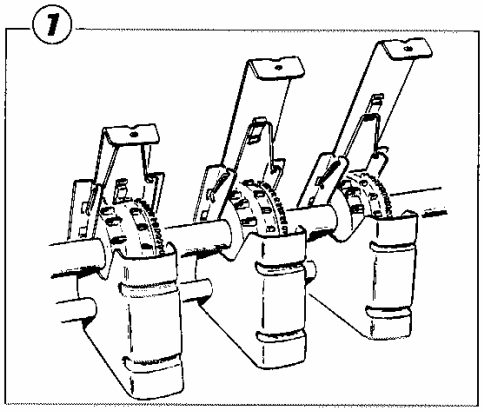

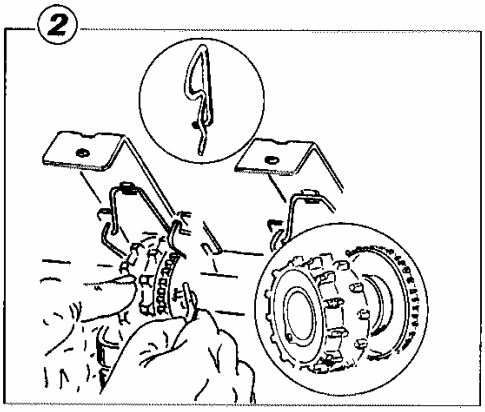

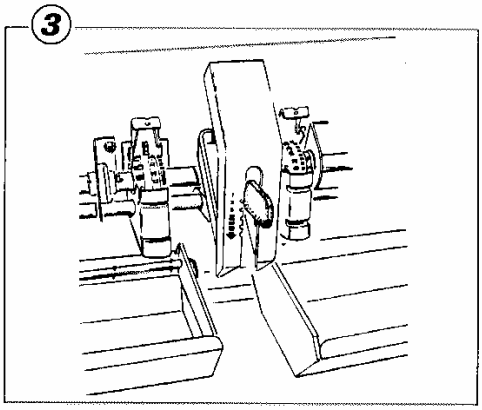

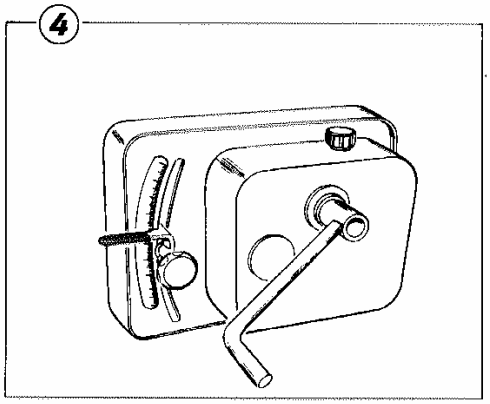

Table settings are merely indicative. Check you flow rate/ha.

REMINDER OF PRE-SETTINGS
[1] Shutters (3 positions)
[2] Peg wheels (2 positions)
[3] Base Flap (6 positions)
[4] Variator (Indices 0 - 90)

FLOW RATE TABLES

- Wheat
- Rapseed – Barely – Peas – Field peas
- Oats – Mustard – Phacelia – Radish
- Alfalfa – Linseed – Ray-grass – Clover

	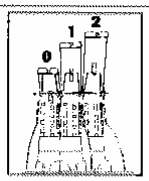		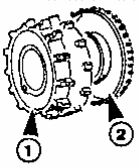
Colza Rape Raps	1	1	2
Luzerne Lucern Luzerne	1	1	1
Ray grass Rye grass Ray gras	1	1	1
Blé Wheat Weizen	2	1	1
Orge Barley Gerste	2	1	1
Pois Peas Erbsen	2	5	1
Phacélia Phacelia Phazelia	1	1	1
Avoine Oat Hafer	2	1	1
Lin Linseed Leinsaat	1	1	1
Radis Radish Radieschen	1	1	1
Moutarde Mustard Senfsamen	1	1	2
Féverole Field beans Ackerbohnen	2	6	1
Trèfle Clover Klee	1	1	1

Flow Rate Tables & Calibration Procedure

An example detailing how to use the calibration chart.

Setting Chart for Wheat.

***Note*: Row spacing is 16 for both 3/4 metre Unidrill**

Working width. No of rows. Row spacing

2,50	17	16
	21	12
3	18	17
	19	16
	21	14
	25	12
3,50	23	15
	29	12
4	24	17
	27	15
	29	14
	33	12
4,5	29	15,5
	33	14
4,8	33	14,5
5	33	15
6	40	
	44	
	48	
6,66	44	
	48	

Blé / Wheat / Weizen

Seed Rate Kg/ha		12	13	14	15	16	17
71		20	22	24	26	28	30
80	160	23	25	28	30	32	34
90	180	27	29	32	34	36	39
100	200	30	33	35	38	40	43
110	220	33	36	39	42	44	47
120	240	36	39	42	45	48	51
130	260	39	43	46	49	52	54
140	280	42	46	49	52	55	58
150	300	45	49	52	55	58	61
160	320	48	52	55	58	62	64
170	340	51	54	58	61	64	67
180	360	53	57	61	64	67	70
190	380	56	60	63	67	70	73
200	400	58	62	66	69	72	75
210	420	61	65	68	72	75	78
220		63	67	71	74	77	80
230		67	71	75	78	81	83
240		69	73	77	80	83	85
250		71	75	79	82	84	86

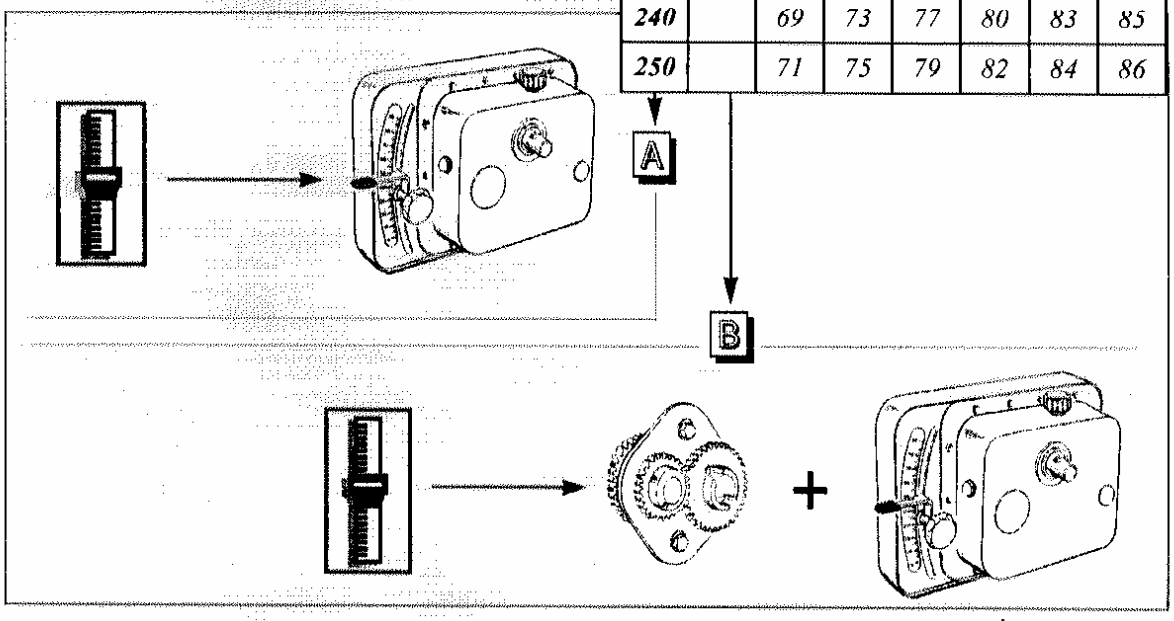

Flow Rate Tables & Calibration Procedure

Colza / Rape / Raps

Kg/ha		12 cm	13 cm	14 cm	15 cm	16 cm	17 cm
1	2	4	4	5	5	5	5
1,5	3	6	6	7	7	7	8
2	4	7	8	9	9	10	11
2,5	5	9	10	11	12	12	13
3	6	11	12	13	14	15	16
3,5	7	13	14	15	16	18	19
4	8	15	16	18	19	20	22
4,5	9	17	18	20	22	23	25
5	10	19	21	22	24	26	27
5,5	11	21	23	25	27	29	30
6	12	23	25	27	29	31	33
7	14	27	30	32	34	37	39
8	16	31	34	37	39	42	44
9	18	35	38	41	44	47	50
10	20	39	43	46	49	52	54
11		43	47	50	53	56	58
12		47	50	54	57	59	62
13		50	54	57	60	62	64
14		54	57	60	63	65	66
15		57	60	63	65	66	
A	B						

Orge / Barley / Gerste

Kg/ha		12 cm	13 cm	14 cm	15 cm	16 cm	17 cm
90	180	33	36	38	41	44	47
95	190	35	38	41	44	47	49
100	200	36	40	43	46	49	52
105	210	38	42	45	48	51	54
110	220	40	44	47	50	54	57
120	240	44	48	51	55	58	61
130	260	48	52	55	59	62	65
140	280	51	55	59	63	66	69
150	300	55	59	63	66	70	73
160	320	58	62	66	70	73	76
170	340	61	65	69	73	76	80
180	360	64	68	72	76	79	83
190	380	67	71	75	79	82	86
200		70	74	78	82	85	89
210		72	77	81	85	88	
220		75	79	83	87		
240		79	84	88			
250		82	86				
160		84	89				
280		88					
A	B						

Pois / Peas / Erbsen

Kg/ha		12 cm	13 cm	14 cm	15 cm	16 cm	17 cm
120	240		11	13	16	18	20
130	260	11	13	16	18	21	23
140	280	13	15	19	21	24	26
150	300	16	18	21	24	26	29
160	320	18	21	24	26	29	32
170	340	20	23	26	29	32	35
180	360	22	25	28	32	34	37
190	380	24	28	31	34	37	40
200	400	26	30	33	36	39	42
210	420	28	32	35	39	42	45
220	440	31	34	38	41	44	47
240	480	34	38	42	45	49	52
250		36	40	44	47	51	54
260		38	42	46	49	53	56
280		42	46	50	53	57	60
300		45	49	53	57	60	63
320		49	53	57	60	63	66
340		52	56	60	63	66	69
360		55	59	63	66	69	72
380		57	62	65	69	72	74
A	B						

Féverole / Field beans / Ackerbohnen

Kg/ha		12 cm	13 cm	14 cm	15 cm	16 cm	17 cm
100	200	12	14	15	16	18	19
105	210	13	14	16	17	19	20
110	220	14	15	17	18	20	22
120	240	15	17	19	21	22	24
130	260	17	19	21	23	25	27
140	280	19	21	23	25	27	30
150	300	21	23	25	27	30	32
160	320	22	25	27	30	32	35
170	340	24	27	30	32	35	38
180	360	26	29	32	35	38	41
190	380	28	31	34	37	40	44
200	400	30	33	36	40	43	47
210	420	32	35	39	42	46	49
220	440	34	37	41	45	49	52
240	480	38	42	46	50	54	58
250		40	44	48	52	56	60
260		42	46	51	55	59	63
280		46	51	55	60	64	68
300		50	55	60	64	69	73
320		54	59	64	69	73	77
A	B						

Flow Rate Tables & Calibration Procedure

Avoine / Oat / Hafer

cm		12	13	14	15	16	17
Kg/ha							
80		40	42	45	48	51	54
85		42	45	48	51	54	57
90	180	44	47	51	54	57	60
95	190	46	50	53	57	60	63
100	200	48	52	56	59	63	66
105	210	51	54	58	62	65	69
110	220	53	57	61	64	68	71
120	240	57	61	65	69	72	76
130	260	61	66	70	73	77	81
140	280	65	70	74	78	82	86
150	300	69	73	78	82	86	90
160	320	72	77	82	86	91	93
170	340	76	81	86	90	93	94
180	360	79	85	90	93	94	88
190	380	83	88	93	94	89	74
200		86	91	94	91	78	47
210		90	94	93	82	55	
A	B						

Moutarde / Mustard /Senfsamen

cm		12	13	14	15	16	17
Kg/ha							
2	4	8	9	9	10	10	11
2,5	5	9	10	11	11	12	13
3	6	11	12	12	13	14	15
3,5	7	12	13	14	15	16	17
4	8	13	14	15	17	18	19
4,5	9	15	16	17	18	20	21
5	10	16	18	19	20	22	23
6	12	18	19	21	22	24	26
7	14	21	23	24	26	28	30
8	16	24	26	28	30	32	34
9	18	27	29	32	34	36	38
10	20	30	32	35	37	39	42
11		33	35	38	41	43	46
12		36	38	41	44	47	51
13		38	41	45	48	52	55
A	B						

Phacélia / Phacelia / Phazelia

cm		12	13	14	15	16	17
Kg/ha							
16	32	8	9	10	10	11	11
18	36	9	10	11	11	12	12
20	40	10	11	12	12	13	14
22	44	11	12	13	13	14	15
24	48	12	13	13	14	15	16
26	52	13	14	14	15	16	17
28		13	14	15	16	17	18
30		14	15	16	17	18	19
32		15	16	17	18	19	21
34		16	17	18	19	21	22
38		17	19	20	21	23	24
40		18	20	21	23	24	25
42		19	21	22	24	25	27
45		20	22	24	25	27	29
48		22	23	25	27	29	30
50		23	24	26	28	30	32
A	B						

Radis / Radish / Radieschen

cm		12	13	14	15	16	17
Kg/ha							
30	60	9	10	11	11	12	13
34	68	10	11	12	13	14	15
36	72	11	12	13	14	15	16
38		12	13	14	15	16	17
42		13	14	15	16	18	19
45		14	15	16	17	19	20
48		15	16	17	19	20	21
50		15	17	18	20	21	22
53		16	18	19	21	22	24
56		17	19	21	22	24	25
60		19	20	22	24	26	27
A	B						

Luzerne / Lucern / Luzerne

Kg/ha		12	13	14	15	16	17
20	40	5	6	7	8	8	9
22	44	6	7	8	9	9	10
24	48	7	8	9	9	10	11
26		8	9	10	10	11	12
28		9	10	10	11	12	13
32		10	11	12	13	14	14
34		11	12	13	14	15	15
38		12	13	14	15	16	17
40		13	14	15	16	17	18
45		14	15	17	18	19	20
50		16	17	19	20	22	23
A	B						

Lin / Linseed / Leinsaat

Kg/ha		12	13	14	15	16	17
50	100	19	21	23	25	27	29
53	106	21	23	25	27	29	31
56	112	22	24	26	28	30	32
60	120	24	26	28	31	33	35
63	126	25	28	30	32	34	37
67	134	27	29	32	34	37	39
71	142	29	31	34	36	39	41
75	150	31	33	36	38	41	43
80	160	33	35	38	41	43	46
85		35	38	40	43	46	48
90		37	40	43	45	48	51
95		39	42	45	48	50	53
100		41	44	47	50	53	55
105		43	46	49	52	55	57
110		45	48	51	54	57	59
120		48	51	55	58	61	64
130		51	55	58	61	64	68
140		55	58	62	65	68	72
150		58	61	65	69	72	76
A	B						

Ray-grass / Rye-grass / RayGras

Kg/ha		12	13	14	15	16	17
16	32	7	8	10	11	12	14
17	34	8	10	11	12	14	15
18	36	9	11	12	13	15	16
19	38	10	12	13	15	16	17
20	40	11	13	14	16	17	19
21		12	14	15	17	18	20
22		13	15	16	18	20	21
24		15	17	18	20	22	23
25		16	18	19	21	23	24
26		17	19	20	22	24	26
28		18	20	22	24	26	28
30		20	22	24	26	28	30
32		22	24	26	28	30	32
34		23	26	28	30	32	34
36		25	27	29	32	34	36
38		26	29	31	33	36	38
40		28	30	33	35	38	40
42		29	32	35	37	39	42
45		32	34	37	40	42	45
48		34	37	39	42	45	47
A	B						

Trèfle / Clover / Klee

Kg/ha		12	13	14	15	16	17
14	28						5
16	32					5	6
18	36				5	6	7
20	40			5	6	7	8
22	44		5	6	7	8	9
24	48	5	6	7	8	9	10
26		6	7	8	9	10	11
28		7	8	9	10	11	12
30		8	9	10	11	12	13
32		9	10	11	12	13	14
34		10	11	12	13	14	15
36		11	12	13	14	15	16
38		12	13	14	15	16	17
40		13	14	15	16	17	18
42		14	15	16	17	18	19
45		15	16	17	18	19	20
48		16	17	18	19	20	21
A	B						

Warranty

In this warranty Moore Uni-Drill is referred to as the Company.

1. Subject to the provisions of this warranty the Company Warrants each new machine sold by it to be sold free from any defect in material or workmanship.

2. If the machine or part there of supplied by the Company is not in accordance with the warranty given in clause 1 the Company will at its option;-

(a) Make good the machine at the Company's expense, or
(b) make an allowance to the purchaser against the purchase price, or replace the machine as soon as reasonably practicable.

3. This warranty shall not oblige the Company to make any repayment in respect of loss of profit or other consequential loss or contingent liability of the purchaser alleged to arise from any defect in the machine or impose any liability on the company other than that contained in clause 2.

4. Any claim under this warranty must be notified to the company in writing specifying the matters complained of within 12 months from the date of receipt be the purchaser or his/her nominee of the machine.

5. Any claim under this warranty must be made by the original purchaser of the machine and is not assignable to any third party.

6. If the purchaser hires out the machine to any third party the warranty shall apply only to matters notified to the Company within 90 days of the date of delivery and clause 4 shall be read as if the period of 90 days were substituted for the period of 12 months.

7. The warranty will cease to apply if:-

(a) any parts not made, supplied or approved in writing by the Company are fitted to the machine, or
(b) any repair is carried out to the machine other than by or with the express written approval of the Company, or
(c) any alterations not expressly authorised by the Company in writing are made to the machine, or
(d) the machine is damaged by accident, or
(e) the machine is abused or overloaded or used for a purpose or load beyond its design capabilities.

8. Any dispute as to whether the goods are sold free from any defect in workmanship or materials shall be referred to a single arbitrator to be agreed between the company and the buyer.

Important

This instruction manual is based on experience and results obtained during development of the Tandem Uni – drill. Hints and guide lines are to be regarded as general advice, entailing no responsibility whatsoever on the part of Moore Uni drill and / or its representatives. All responsibility for usage, road transport, maintenance and repair of the drill rests with the owner/driver.

Local conditions affecting crop sequence, soil type, climate etc. may require procedures different to those mentioned in this manual.

The owner/driver is solely responsible for using the drill correctly in every respect. Moore Uni – Drills are subject to thorough quality assurance inspection and function testing before delivery. The user/purchaser shall retain sole liability for insuring the equipment is functioning correctly when in use. Moore Uni-Drill Ltd accepts no liability for losses arising from incorrect use of the drill, including its depth control and seed dosage equipment. Follow the instructions carefully for setting the depth control and seed rate dosage.

In accordance with the program of continuous development at Moore Uni-Drill Ltd, alterations in the specification may be made at any time without notice.

Therefore Moore Uni-Drill Ltd will not accept responsibility for any discrepancies which may occur between the specifications contained in this publication.

DP300A and DP400A Parts booklet

2005 Specification

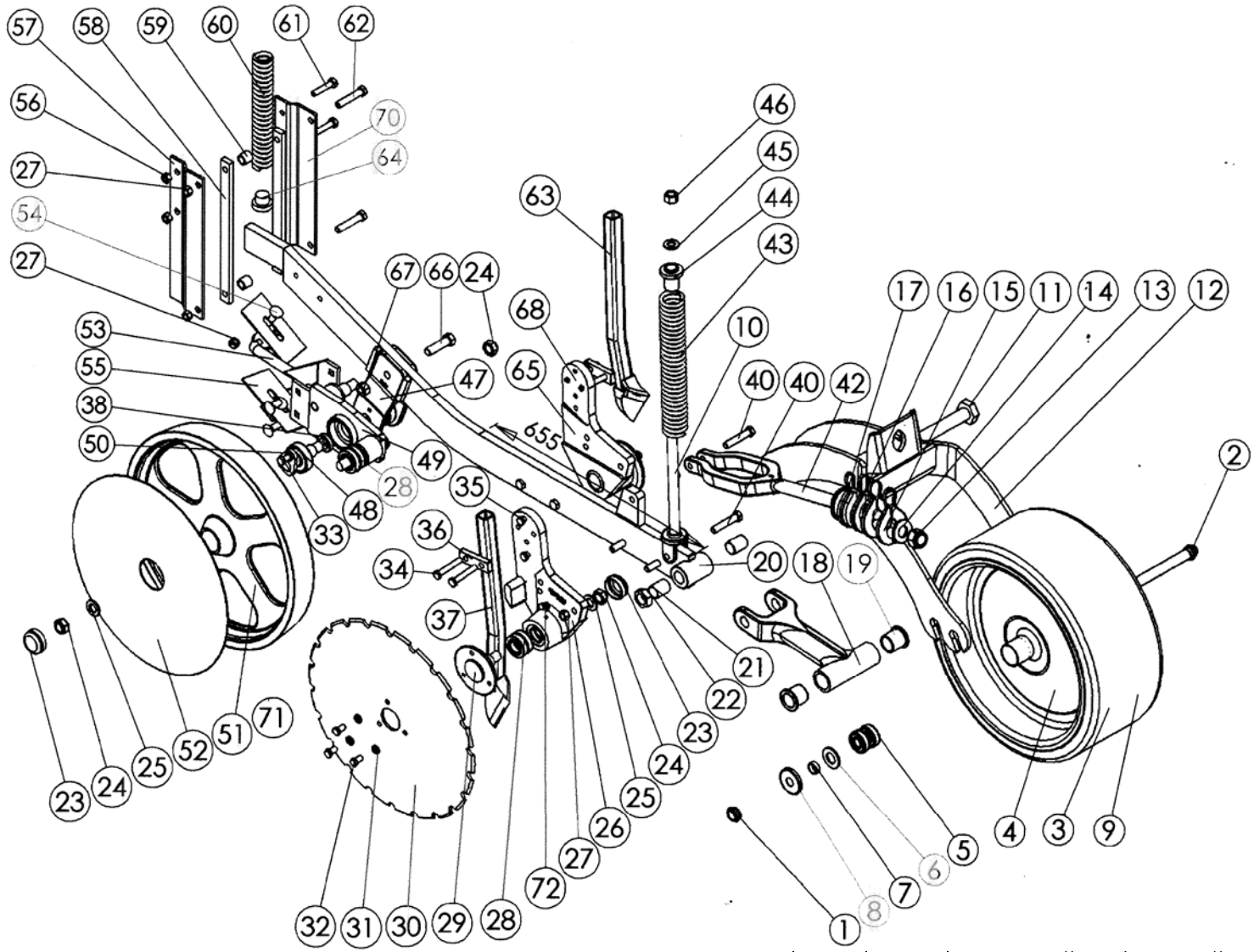

Ref	Part No	Description
1	010015	M20 Recessed Binx Nut
2	010013	Farm Flex wheel Axle
3	210003	Farm Flex Tyre
4	210002	Farm Flex Rim
5	210004	Farm Flex Wheel Bearings
6	210005	Dust Washer
7	210006	Spacer Tube
8	210007	Outer Washer
9	210001	Complete Farm Flex Wheel
10	570005	Front Spring Rod
11	020015	Pivot Arm Bolt
12	020005	Front wheel carrier
13	140080	M24 nyloc
14	010021	Depth Clip Stopper
15	550003	¼” depth clip
16	550002	½” depth clip
17	550001	1” depth clip
18	020018	Tandem Swinging Arm
19	720002	Pivot Arm Bushes
20	020001	Tandem Drag Arm Bar
21	720004	Tandem Drag Arm Boss Bush
22	010023	1” UNF Slim Binx Nut
23	560004	Small Dust Cap
24	140057	¾” UNF Cone Lock
25	140006	M20 x 35 x 5mm HD washer
26	570004	Disc Mounting Bracket R/H
27	140030	M12 Nyloc
28	180001	1” Timken Taper Roller Bearing Pack
29	010016	Disc Hub
30	600001	450 mm notched disc
31	140039	3/8” Spring washer
32	140055	¾” x 3/8” UNF setscrew
33	140040	M10 x 20 set screw
34	140078	M12 x 30 set screw
35	140096	M10 x 35 set screw
36	051522	Quick Coulter Support
37	020011	Right Hand Tungsten Coulter
38	010208	Boggie Bearing Spacer
39	N/A	N/A
40	140025	M12 x 75 Bolt
41	140029	M12 x 55 Bolt
42	570006	Depth Control Rod
43	690003	Tandem Front Spring
44	720001	Tandem Front Spring Locator
45	140016	M16 Heavy duty washer
46	140017	M16 Nyloc
47	570002	Boggie Carrier
48	690001	Boggie Bearing 63025RS
49	020004	Boggie Centre
50	020081	Boggie Centre Pin
51	570001	Chamfered Press wheel
52	580001	Press Wheel Cover
53	570007	Scraper mounting bracket
54	140026	M12 x 30 Cup square
55	200004	Chamfered Press Wheel Scraper
56	140041	M10 Nyloc
57	010165	Drag Arm guide plate R/H
58	010026	Steel Wear Bar
59	010027	Distance piece
60	690002	Tandem Rear Springs
61	140033	M10 x55 bolt
62	140024	M12 x 80 bolt
63	020009	Left Hand Tungsten Coulter
64	720003	Rear Spring Locator
65	570003	Disc Mounting Bracket L/H
66	140011	M16 x 55 bolt
67	140018	M16 Binx nut
68	020063	R/H Disc Coulter bracket c/w bearing and hub
69	020064	L/H Disc Coulter bracket c/w bearing and hub
70	010024	Drag Arm Guide Plate Left Hand
71	020010	Chamfered Press Wheel Complete

2005 Specification

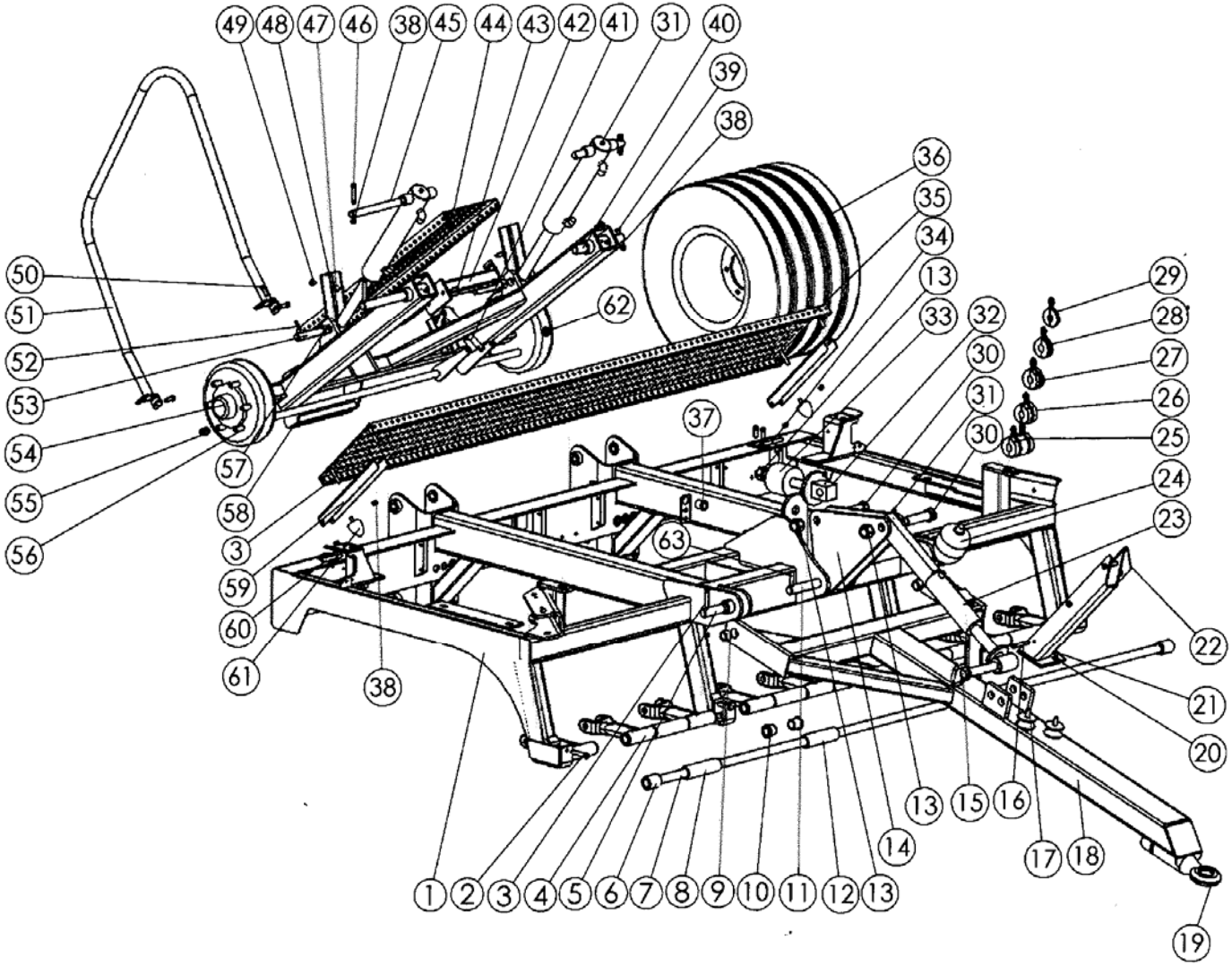

REF	Part No	Description
1	020100	C3000T Frame MK2
2	140076	M12 x 75 Bolt
3	140032	M10 x 70 Bolt
4	020015	Tandem Pivot Arm
5	010229	C3000T MK2 Draw Bar Pin
6	010068	Bushed End Spacer
7	010090	3000 Front Pivot Bar
8	010070	Spacer bush
9	670002	1 ½” x 1 ¼” x 1” hardened bush
10	720002	Pivot Arm Bush
11	010230	Draw Bar Lever Pin
12	010069	Bushed Spacer
13	140066	1 ¼” UNC Lock nut
14	020120	Draw Bar Lever Assy
15	460009	1 ¼” x 7” Pin and chain
16	140031	M10 x 80 bolt
17	620004	Hose holder buffer
18	020119	C3000 MK2 Draw Bar
19	490005	Swivel hitch eye
20	140084	M12 Heavy washer
21	140030	M12 nyloc
22	020047	Hose Holder Assy
23	020115	C3000T MK2 Front Ram
24	420001	Hydraulic Accumulator
25	550004	4” Large depth clip
26	550005	2” Large depth clip
27	550006	1 ½” Large depth clip
28	550007	1” large depth clip
29	550008	½” large depth clip
30	140139	1 ¼” x 5” UNC bolt
31	140090	M8 Straight grease nipple
32	020121	DP Connection lever link
33	010223	Spacer Link
34	020026	Platform Hinge left
35	010089	C3000T Rear Platform
36	320001	19/45/17 Floation +
37	280001	Rubber grommet
38	140041	M10 Nyloc
39	140031	M10 x 80 bolt
40	010054	1 ¼” chassis pin
41	490001	Brake Ram Assy
42	020122	Platform Post
43	140027	M12 x 30 set screw
44	010082	Rear Axle Safe deck
45	010231	Chassis rear ram pin C3000T MK2
46	140032	M10 x 70 bolt
47	620003	Female small buffer
48	310034	Transport Lock
49	320002	Male small buffer
50	140096	M10 x 35 sets

50	140096	M10 x 35 sets
51	020033	Rear Hand Rail
52	140083	M8 x 40 spirol pin
53	010053	Rear Axle short Pin
54	340008	65mm sq axle dust cap
55	340007	M18 wheel nut
56	340009	M18 x 1.5 wheel stud
57	670001	1 ¼” x 1”x 1” hardened bush
58	020032	Rear Step
59	310004	Rear Platform Bracket
60	020027	Platform hinge right
61	620001	KP buffer
62	020075	C3000T MK2 Axle unit
63	140079	M10 x 60 Spirol Pin

2005 DP300 chassis

System Moore

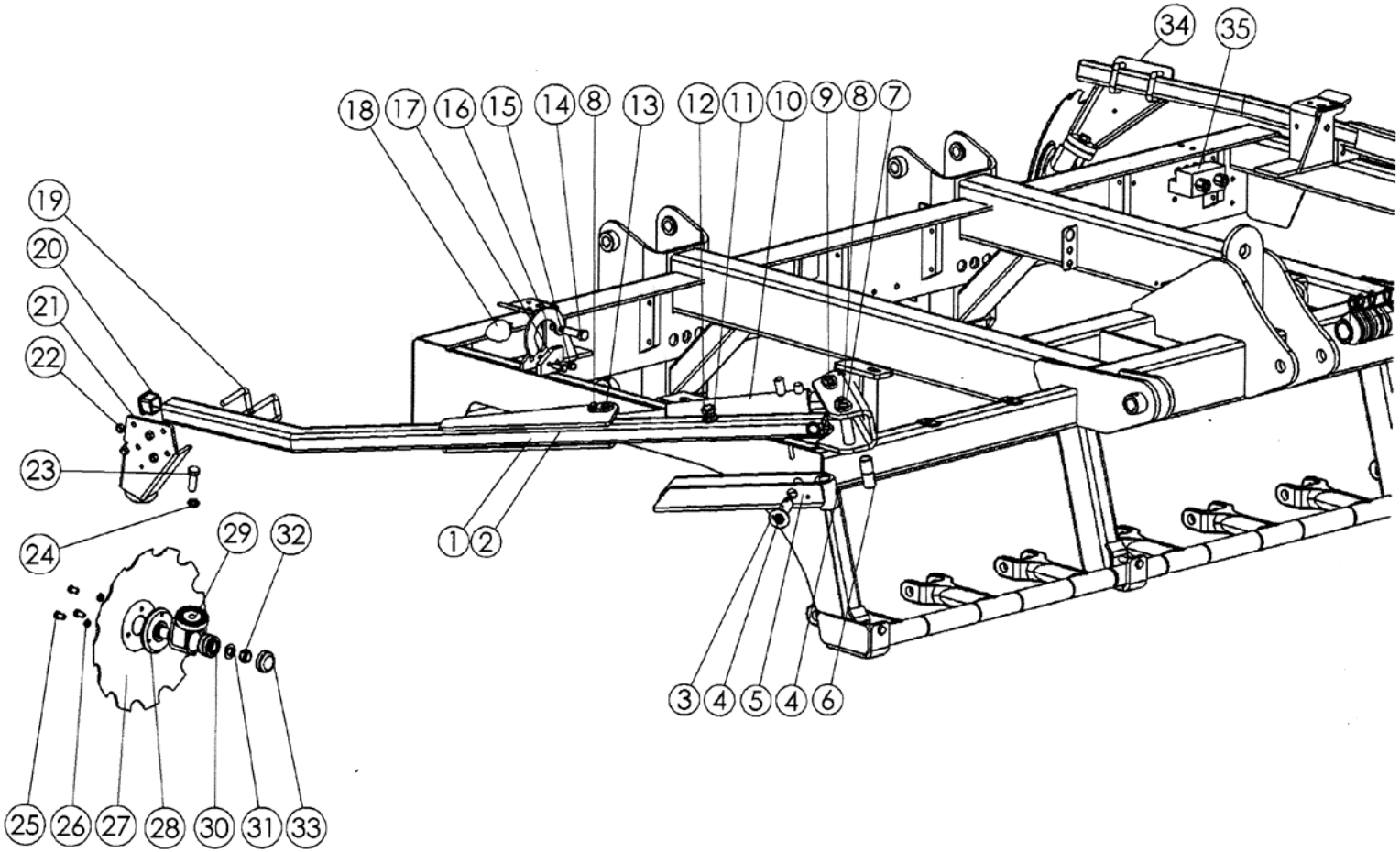

REF	Part No	Description
	020128	C3000T Marker Kit Assembly
	020129	C4000T Marker Kit Assembly
1	020060	C3000T Marker Arm
2	020130	C4000T marker arm
3	020069	DP Marker Pin Assy
4	140090	M8 Straight grease nipple
5	020041	C series Marker Hinge
6	720006	Devol Drag Arm Bush
7	020068	DP Marker Swivel Pin
8	140038	M10 x 25 set screw
9	020127	¾ marker ram long pin
10	080006	C series Marker Ram
11	140140	M20 ½ nut
12	140129	M20 x 80 set screw
13	020126	¾ Ram pin short
14	140014	M16 x 30 set screw
15	140096	M10 x 35 set screws
16	310052	Marker Lock
17	010093	Marker Ramp
18	620001	Elasto KP buffer
19	250001	U bolt for 50 x 50 box
20	480001	50 x 50 End cap
21	020123	Main Marker Disc Bracket Right Assy
22	140030	M12 Nyloc
23	140011	M16 x 55 set screw
24	140087	M16 Lock washer
25	140055	¾” x 3/8” UNF set screws
26	140039	3/8” HD Spring washers
27	600002	Marker disc Notched
28	010016	Disc Hub
29	020125	Marker hub mounting assy
30	180001	1” Taper Roller bearing
31	140006	M16 x 32 HD washer
32	140057	¾” UNF cone lock
33	560004	Small dust Cap
34	020124	Main Marker Disc Bracket left Assy
35	510001	Marker Sequence Valve

Marker Circuit Diagram

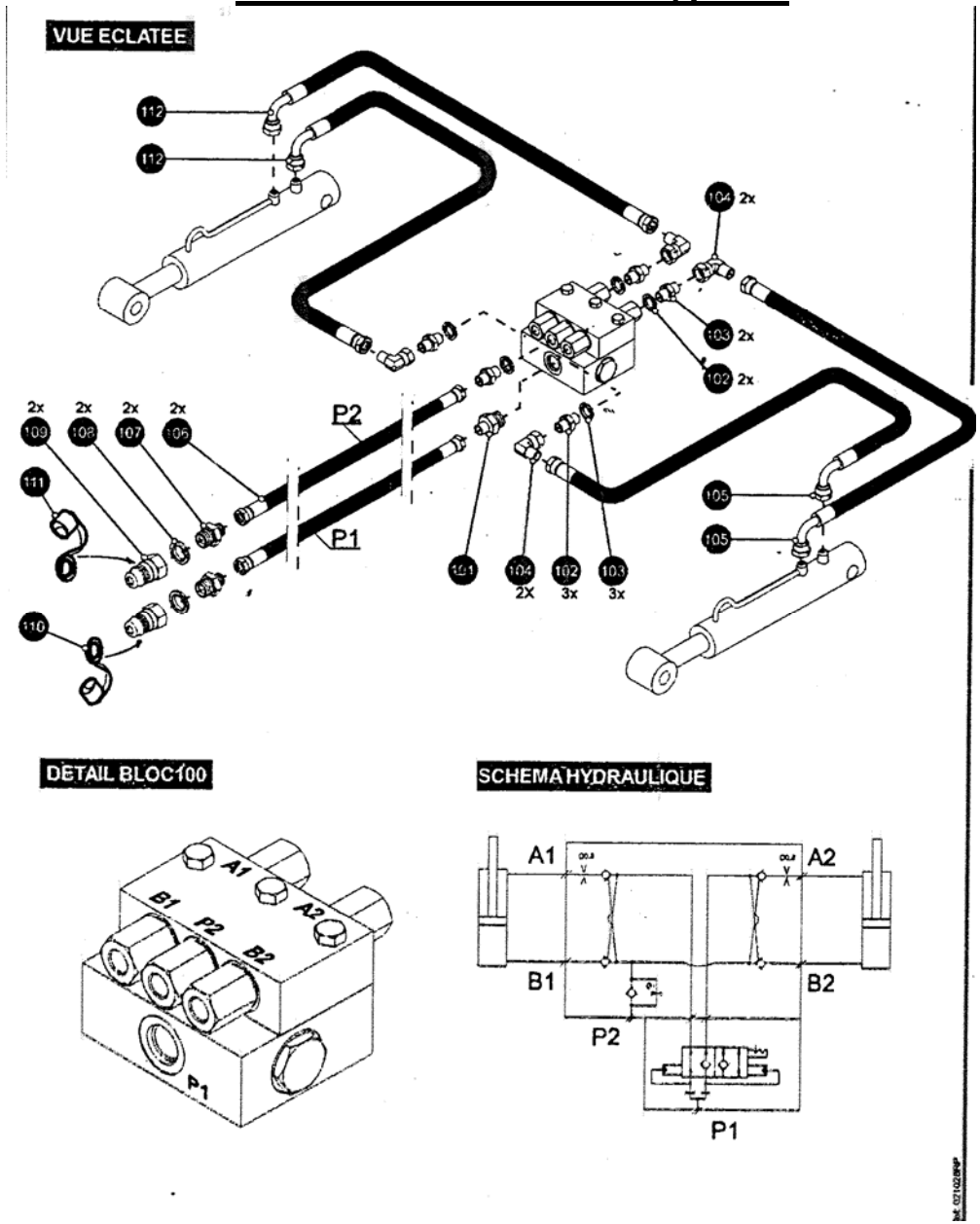

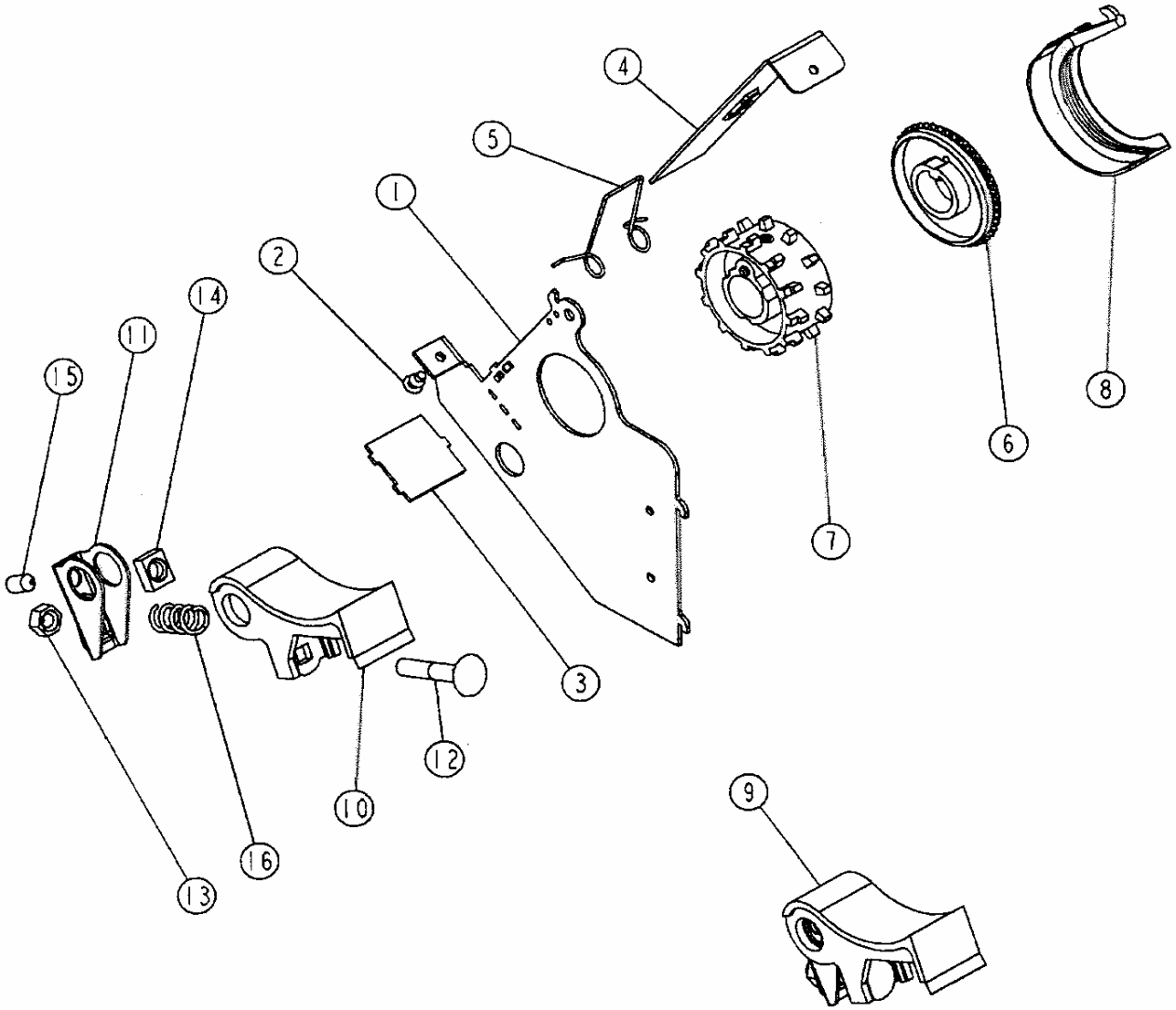

Rep	Code	Désignation
1	971026	Boitier de distribution pi
2	598041	Rivet aveugle 4x10 alu
3	965056	Entretoise sp
4	907381	Trappe de distribution
5	981404	Ressort de trappe sp
6	901537	Roue fine
7	900520	Roue a ergot mo
8	985210	Obturateur sp
9	910100	Clapet de fond mo
10	985209	Clapet de fond
11	904599	Support de sabot
12	525895	Vis trcc 8x45 zn 6 c fe
13	571458	Ecrou frein h8 zn 6 c fe
14	571806	Ecrou carre m8 zn 6 c fe 15x6
15	540855	Vis sthc 8x15 zn 6 c fe bp90
16	909081	Ressort de sabot

Distribution Mechanism

System Moore

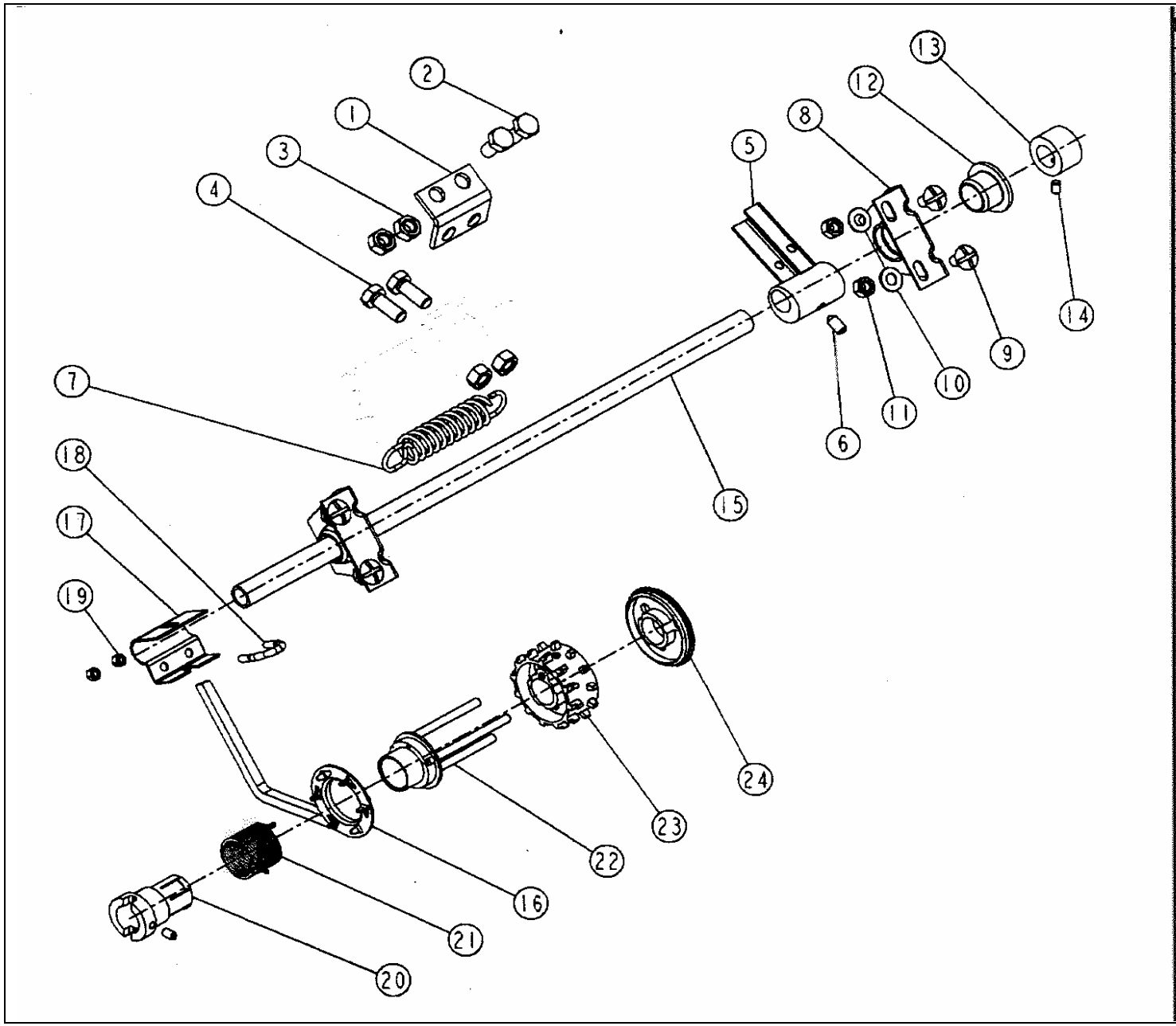

Rep	Code	Désignation
1	967054	Platine de verin
2	552070	Vis h 10x20 zn 6 c fe
3	571210	Ecrou h10 zn 6 c fe
4	552076	Vis h 10x25 zn 6 c fe fst
5	909508	Butee reglable so
6	540855	Vis sthc 8x15 zn 6 c fe bp90
7	908010	Ressort d ouverture
8	901473	Palier d arbre d ergot
9	535853	Vis trl 8x16 zn 6 c fe
10	573158	Rondelle m8n zn 6 c fe
11	571208	Ecrou h8 zn 6 c fe
12	985009	Bague de palier guidage
13	901571	Butee de reglage tramlines
14	554610	Vis sthc 6x10 bout cuvette
15	992332	Barre de debrayage uw
16	918147	Flasque debrayage sp so
17	906168	Etrier de reperage
18	901578	Bride d etrier
19	571205	Ecrou h5 zn 6 c fe
20	923067	Recepteur tramlines
21	981405	Ressort d embrayage
22	914101	Plateau sp so
23	910361	Roue a ergot tram sp
24	985022	Roue fine tramlines sp

Tramline mechanism

System Moore

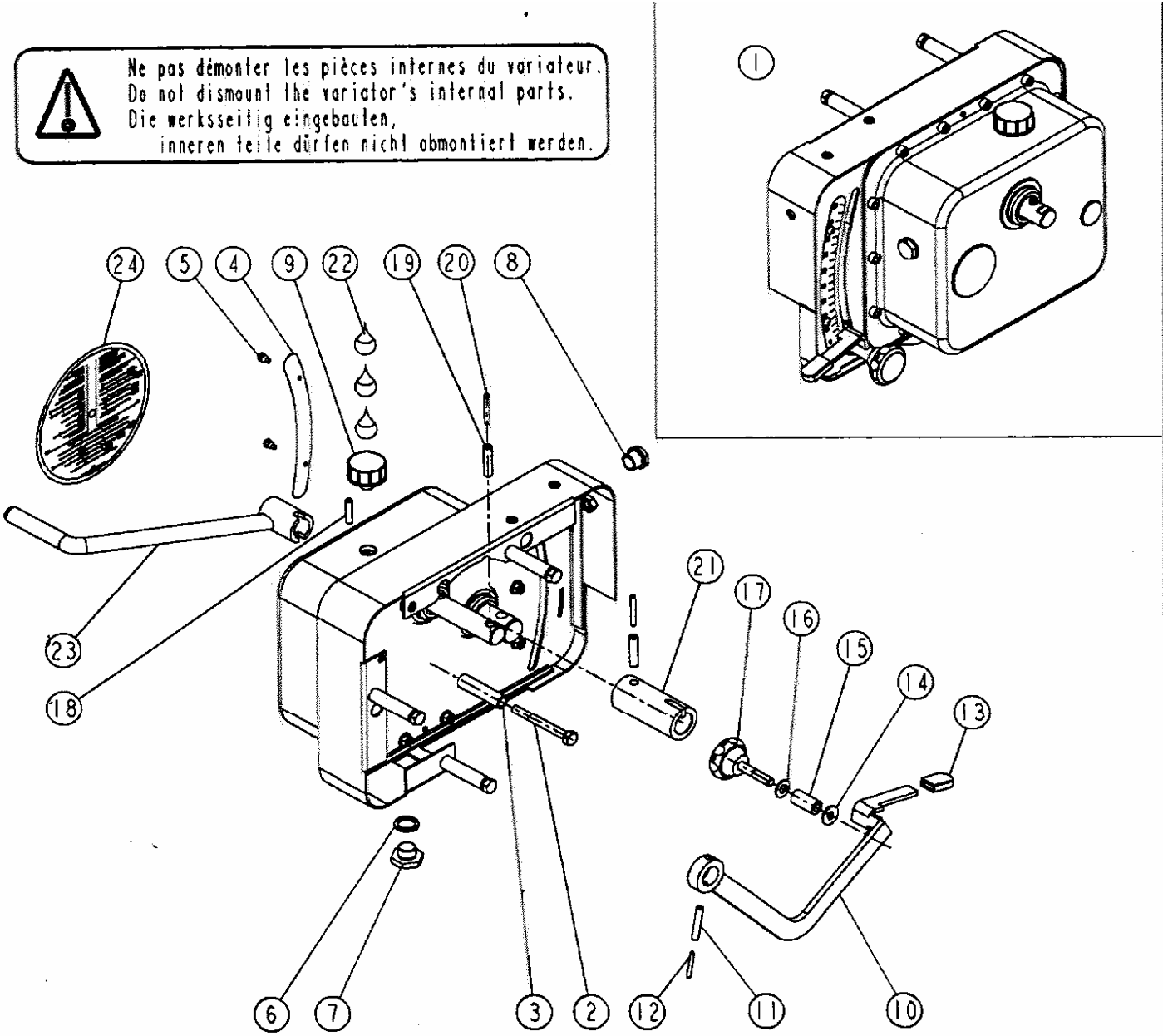

Rep	Code	Désignation
1	910685	Variateur unidrill-w mo
2	551920	Vis h 8x70 zn 6 c fe fp
3	992045	Entretoise de variateur
4	989002	Vernier d de variateur
5	598041	Rivet aveugle 4x10 alu
6	737003	Joint cuivre ferme 17x23x2
7	984008	Bouchon de vidange 3 8 gaz
8	795070	Temoin d huile 3 8 gaz
9	795060	Reniflard 3 8 gaz variateur
10	915012	Levier de variateur d so
11	590307	Goup elastic 6x35 serie ep
12	590106	Goup elastic 3 5x28 serie ep
13	415749	Poignee k 14x4x25 noir
14	573260	Rondelle polyamide 8x20x2
15	925027	Cale de levier
16	573158	Rondelle m8n zn 6 c fe
17	910296	Poignee de cmde h8x45 inox
18	590306	Goup elastic 6x28 serie ep
19	590407	Goup elastic 8x35 serie ep
20	590207	Goup elastic 5x35 serie ep
21	915138	Noix de distribution uw so
22	480002	Huile fluide atx 1 litre
23	916148	Manivelle 2
24	989017	Reglette debit semoir

Variator Gear Box

UM_D2_00

n° de série: ->

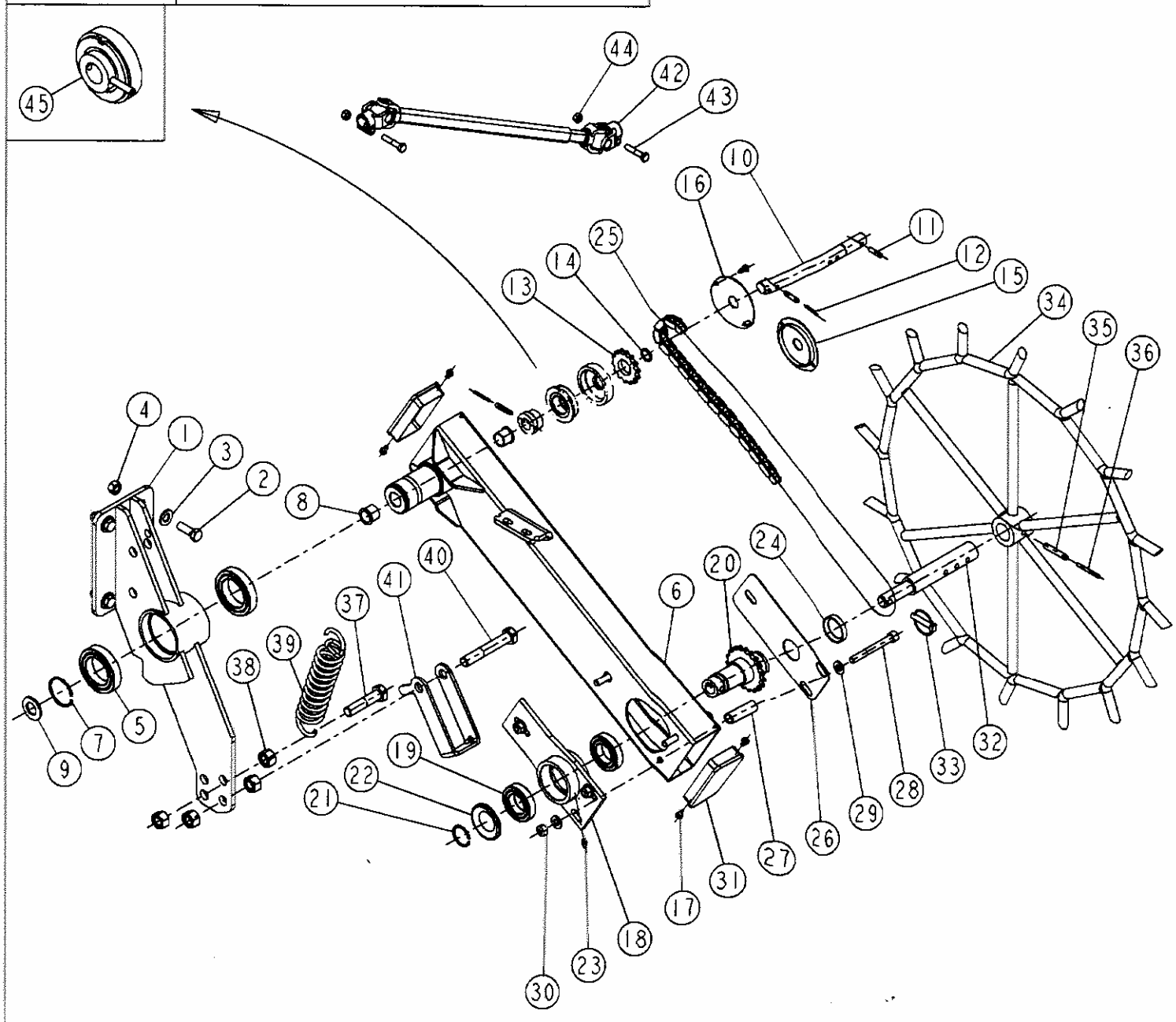

rep	code	BRAS_DE_ROUE_D_UM_RCH - 18-Oct-2005
1	914158	PALIER_ROUE_UM_SO
2	552285	VIS_H_12X35_ZN_6_C_FE_FST
3	573112	RONDELLE_M12_N_ZN_6_C_FE
4	571212	ECROU_H12_ZN_6_C_FE
5	711007	ROULEMENT_6010_1RS1_50X80X16
6	915145	BRAS_DE_ROUE_COURT_D_UM_SO
7	574248	CIRCLIPS_EXT_D50
8	752202	BAGUE_CALCAR_BP_25C_20X24X20
9	573170	RONDELLE_M20_N_ZN_6_C_FE
10	922107	AXE_MENE_MP
11	590306	GOUP_ELASTIC_6X28_SERIE_EP
12	590106	GOUP_ELASTIC_3_5X28_SERIE_EP
13	980698	DISQUE_PAS_12_7_14_DTS_UN
14	574220	CIRCLIPS_EXT_D20
15	974052	BOUCHON_SUP_DE_BRAS_ROUE
16	925094	RONDELLE_ETANCHEITE_BRAS_ROUE
17	557612	VIS_CLS_C_ST5_5X16_ZN_6_C_FE
18	914059	PLATINE_AR_SO
19	711006	ROULEMENT_6007_RS1_35X62X14
20	914157	PIGNON_MENANT_UM_SO
21	574235	CIRCLIPS_EXT_D35
22	750002	ROND_ETANCHEITE_Z007
23	719001	GRAISSEUR_M6X100_DROIT
24	734015	JOINT_V_RING_D35
25	980616	CHAINE_PRIMAIRE_UM_3M
26	974051	COUVERCLE_DE_BRAS_MP
27	923090	ENTRETOISE_DE_BRAS_MP
28	554090	VIS_CHC_10X90_ZN_6_C_FE_8_8_FP
29	573109	RONDELLE_M10_N_ZN_6_C_FE
30	571460	ECROU_FREIN_NYLOM_H10_ZN_6_C_FE
31	415727	BOUCHON_120X60_GPN_270
32	930002	AXE_DE_ROUE
33	594308	CLIPS_DESOL_D8_5_ZN_6_C_FE
34	916016	ROUE_D_ENTRAINEMENT
35	590410	GOUP_ELASTIC_8X50_SERIE_EP
36	590210	GOUP_ELASTIC_5X50_SERIE_EP
37	552720	VIS_H_16X70_ZN_6_C_FE_FP
38	571216	ECROU_H16_ZN_6_C_FE
39	981100	RESSORT_DE_DOME
40	552733	VIS_H_16X100_ZN_6_C_FE_FP
41	951586	VERROU_BRAS_ROUE_UNID_T
42	980795	CARDAN_BRAS_DE_ROUE_MP
43	551890	VIS_H_8X40_ZN_6_C_FE_FP
44	571458	ECROU_FREIN_H8_ZN_6_C_FE
45	911023	ROUE_LIBRE_BAGUE_COURT_CLOCH_AS

Drive Wheel Assy

UM_J3_00 n° de série: ->

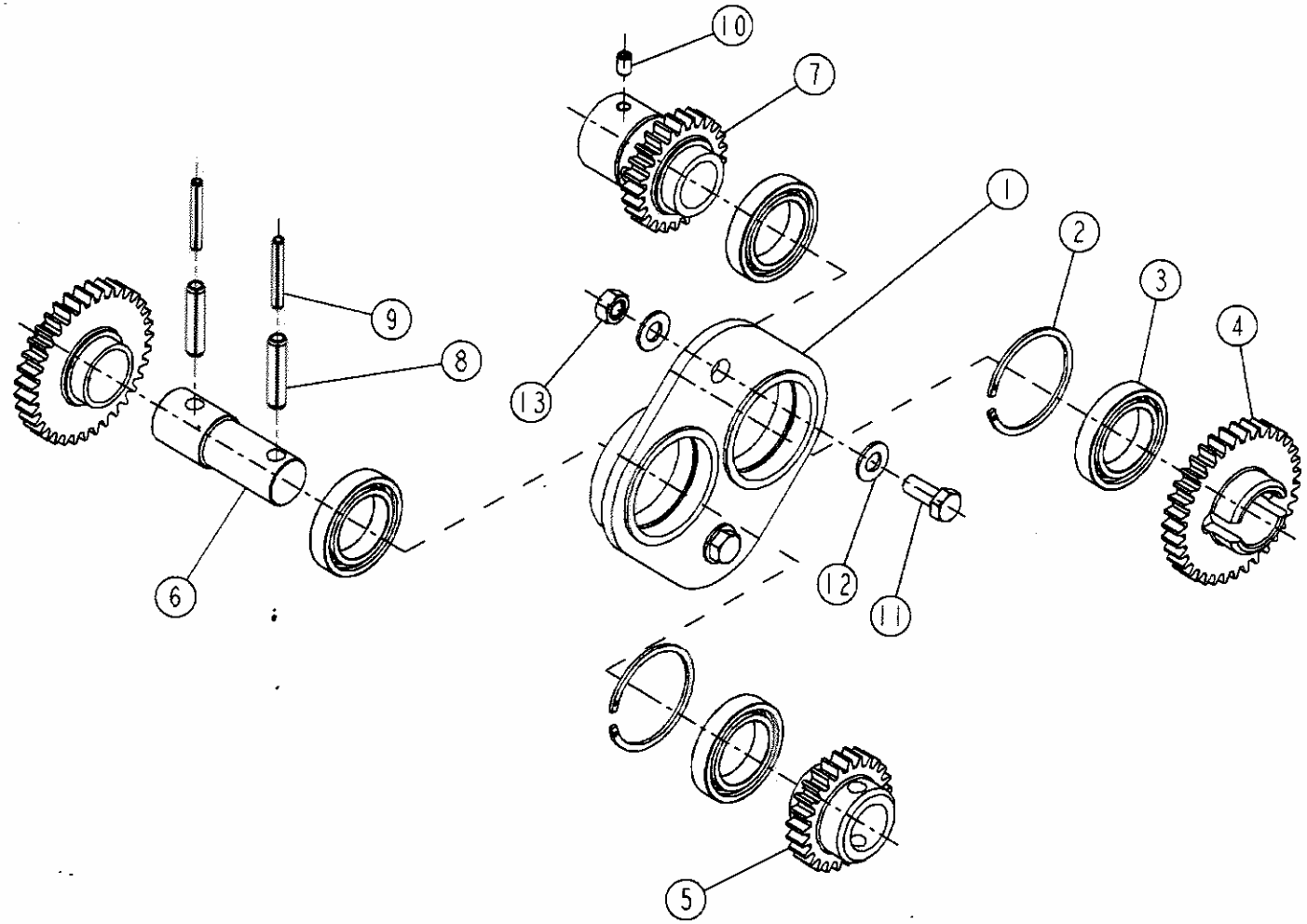

rep	code	KIT_MULTIPLICATEUR_RCH - 20-Oct-2005
1	914114	PLATINE_MULTIPLICATEUR_SO
2	574251	CIRCLIPS_INT_D47
3	711015	ROULEMENT_61906_2RSI_30X47X9
4	980781	PIGNON_MULTIPLICATEUR_35D
5	980780	PIGNON_MULTIPLICATEUR_25D
6	930024	ARBRE_RENVOI_MULTIPLICATEUR
7	915041	PIGNON_MULTI_25D_SO
8	590407	GOUP_ELASTIC_8X35_SERIE_EP
9	590207	GOUP_ELASTIC_5X35_SERIE_EP
10	554610	VIS_STHC_6X10_BOUT_CUVETTE
11	551870	VIS_H_8X20_ZN_6_C_FE_8_8_FST
12	573158	RONDELLE_M8_N_ZN_6_C_FE
13	571208	ECROU_H8_ZN_6_C_FE

Multiplier

System Moore

UM_D4_00	n° de série: ->

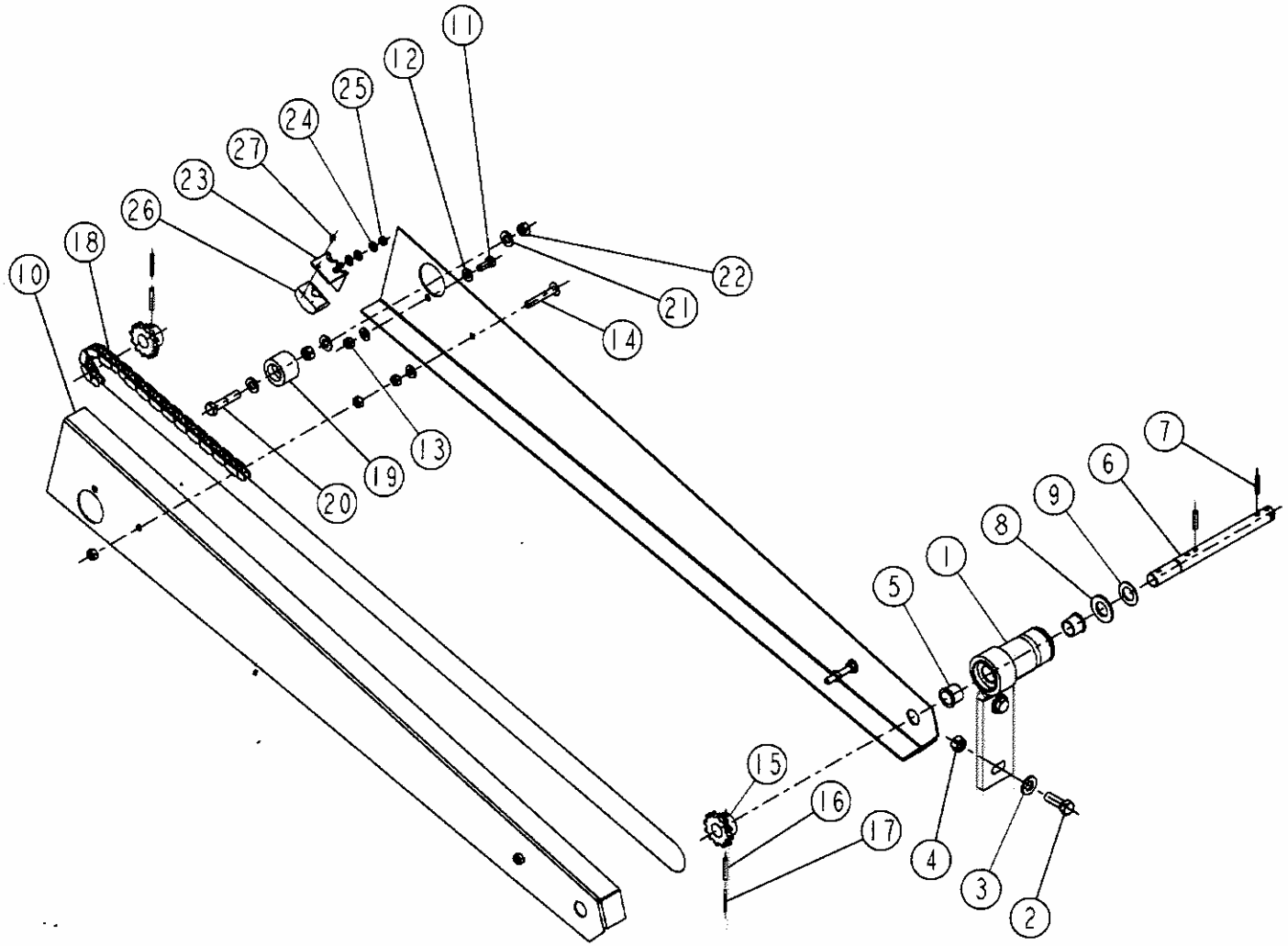

rep	code	RELAI_UM_RCH - 20-Oct-2005
1	914159	MOYEU_RELAIS_UM_SO
2	552285	VIS_H_12X35_ZN_6_C_FE_FST
3	573112	RONDELLE_M12_N_ZN_6_C_FE
4	571212	ECROU_H12_ZN_6_C_FE
5	752202	BAGUE_CALCAR_BP_25C_20X24X20
6	922107	AXE_MENE_MP
7	590306	GOUP_ELASTIC_6X28_SERIE_EP
8	573170	RONDELLE_M20_N_ZN_6_C_FE
9	926066	RONDELLE_ROUE_FARMFLEX_UNID_T
10	972128	CARTER_DE_CHAINE_UM
11	551870	VIS_H_8X20_ZN_6_C_FE_8_8_FST
12	573158	RONDELLE_M8_N_ZN_6_C_FE
13	571208	ECROU_H8_ZN_6_C_FE
14	535861	VIS_TRL_8X50_ZN_6_C_FE_8-8
15	993116	PIGNON_PAS_12_7_12_DTS
16	590307	GOUP_ELASTIC_6X35_SERIE_EP
17	590107	GOUP_ELASTIC_3X36_SERIE_EP
18	980617	CHAINE_SECONDAIRE_UM_3M
19	998116	GALET
20	552100	VIS_H_10X50_ZN_6_C_FE_FP
21	573109	RONDELLE_M10_N_ZN_6_C_FE
22	571210	ECROU_H10_ZN_6_C_FE
23	900171	SUPPORT_TENDEUR_SO
24	573107	RONDELLE_M6_N_ZN_6_C_FE
25	571206	ECROU_H6_ZN_6_C_FE
26	904551	TENDEUR_DE_CHAINE
27	557610	VIS_CBL_Z_ST3.5X9.5_INOX_A2_70

Chain Drive system

UM_BI_00

n° de série: ->

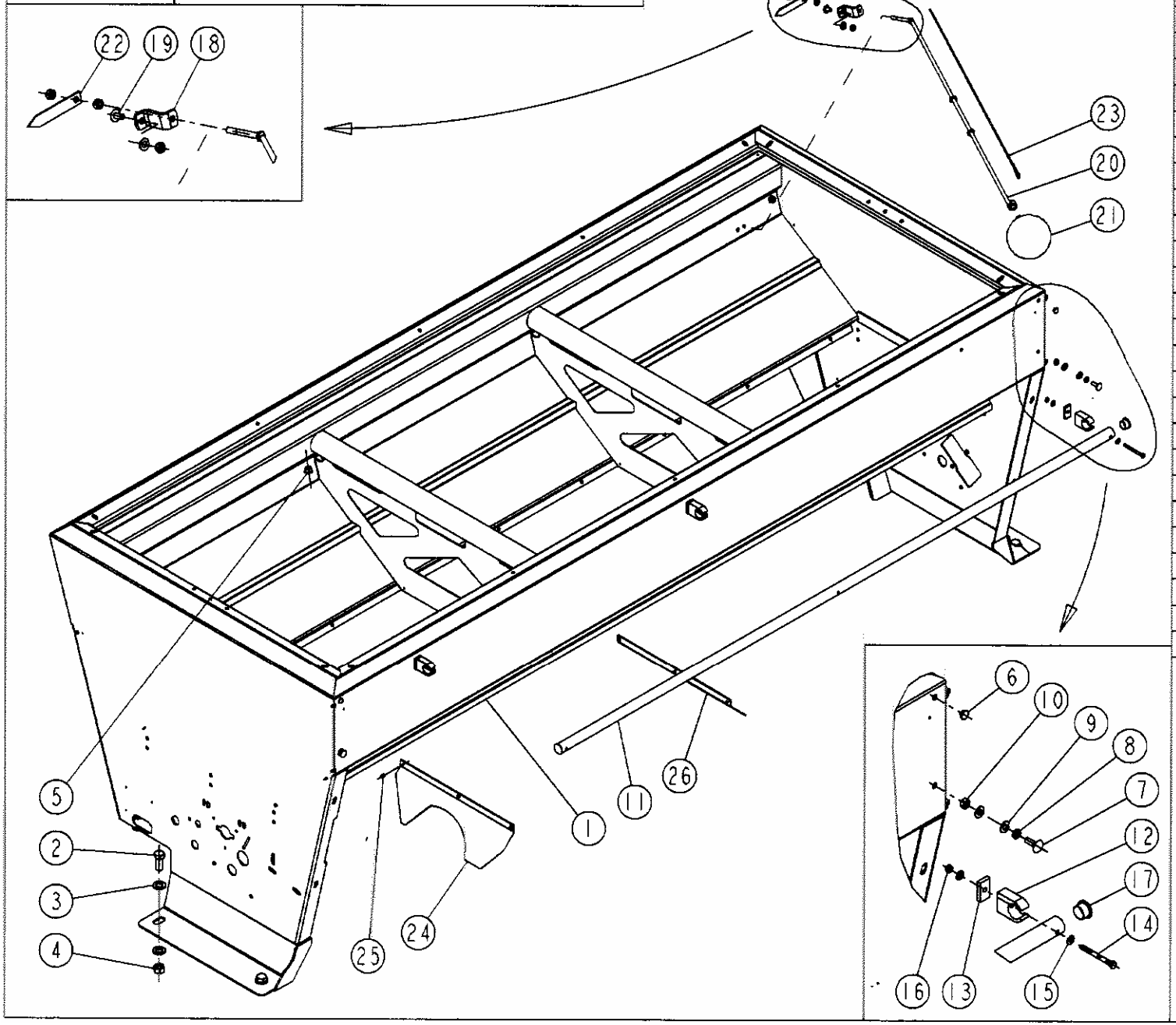

rep	code	TREMIE_UM_RCH - 24-Oct-2005
1	919162	TREMIE_MECA_UM_SO
2	552690	VIS_H_16X40_ZN_6_C_FE_FP
3	573166	RONDELLE_M16_N_ZN_6_C_FE
4	571216	ECROU_H16_ZN_6_C_FE
5	415715	BOUCHON_D16_GPM_300_F15_NAT
6	415716	BOUCHON_D9_GPM_300_F041_NAT
7	558925	VIS_TRCC_8X25_INOX_A2_70
8	571278	ECROU_HM_8_INOX_A2_70
9	573158	RONDELLE_M8_N_ZN_6_C_FE
10	571208	ECROU_H8_ZN_6_C_FE
11	951092	RAMPE_D_APPUI
12	794006	COLLIER_COBRA_DIAM_25
13	952100	ENTRETOISE_DE_RAMPE
14	551695	VIS_H_6X65_ZN_6_C_FE_FP
15	573107	RONDELLE_M6_N_ZN_6_C_FE
16	571206	ECROU_H6_ZN_6_C_FE
17	415730	BOUCHON_D23_SR1500_11780
18	924026	PALIER_INDICATEUR_NIVEAU
19	535853	VIS_TRL_8X16_ZN_6_C_FE
20	916155	INDICATEUR_DE_NIVEAU_MP_SO
21	799050	BOULE_NIVEAU
22	909111	INDICATEUR_DE_POSITION
23	987810	CORDELETTE_DE_NIVEAU_C3000T
24	975117	DEFLECTEUR_G_UM
25	598041	RIVET_AVEUGLE_4X10_ALU
26	975118	DEFLECTEUR_D_UM

C3000T seed box

System Moore

UM_B3_00

n° de série: ->

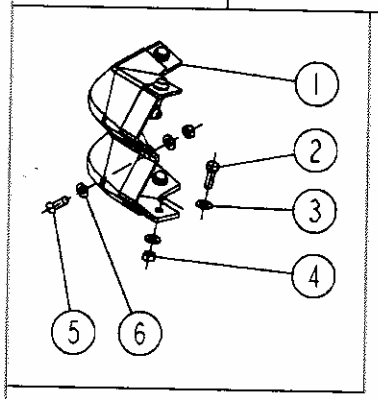

rep	code	REHAUSSE_2_SOUFFLETS_UM_RCH - 26-Oct-2005
1	973045	COIN_REHAUSSE_DOUBLE
2	551875	VIS_H_8X25_ZN_6_C_FE_FP
3	573158	RONDELLE_M8_N_ZN_6_C_FE
4	571458	ECROU_FREIN_H8_ZN_6_C_FE
5	555825	VIS_BHC_8X25_INOX_A2_70
6	573008	RONDELLE_NYLON_PA66_8
7	970219	REHAUSSE2LARG_UM
8	970147	REHAUSSE2LONG_LX
9	794021	BANDE_ADHESIVE_1_FACE_AU_M

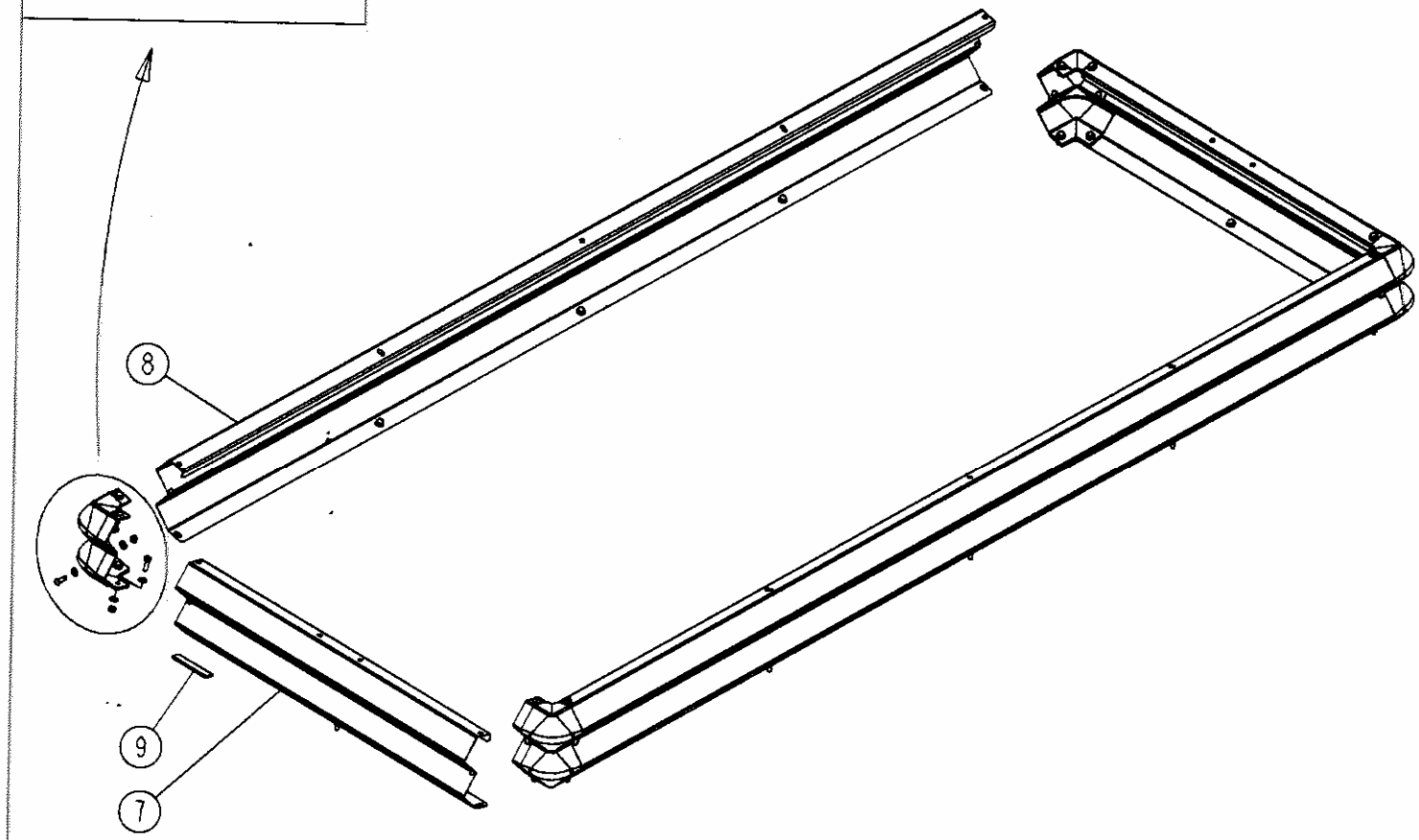

Hopper Extension

System Moore

UM_B2_00	n° de série: ->

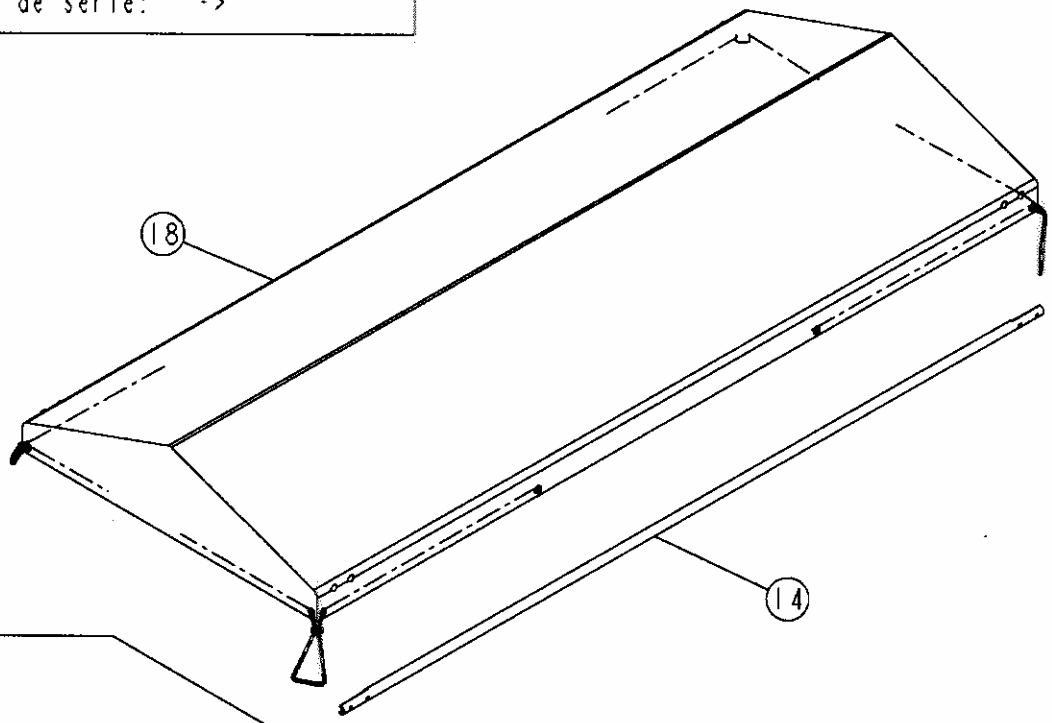

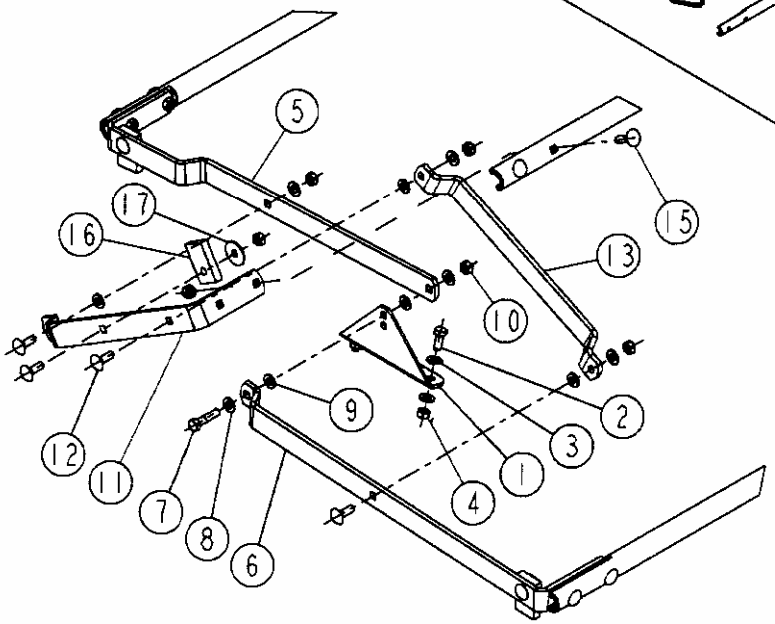

rep	code	BACHE_UM_RCH - 25-Oct-2005
1	967107	EQUERRE_BACHE_DRX
2	551870	VIS_H_8X20_ZN_6_C_FE_8_8_FST
3	573158	RONDELLE_M8_N_ZN_6_C_FE
4	571208	ECROU_H8_ZN_6_C_FE
5	942081	BRAS_BACHE_UM
6	942082	BRAS_AVANT_BACHE_UM
7	558835	VIS_H_8X35_INOX_A2_70_FP
8	573808	RONDELLE_M8_N_INOX_A2_70
9	573008	RONDELLE_NYLON_PA66_8
10	571408	ECROU_FREIN_NYLON_H8_INOX_A2_70
11	942059	BRAS_CENTRAL_LX_DX
12	558925	VIS_TRCC_8X25_INOX_A2_70
13	942057	BIELETTE_BACHE_LX_DX
14	940107	TUBE_BACHE_LX
15	558930	VIS_TRCC_8X30_INOX_A2_70
16	987719	AMORTISSEUR_BACHE_LX_DX
17	573358	RONDELLE_LL8_N_INOX_A2_70
18	987630	BACHE_UM_3M

Hopper Cover

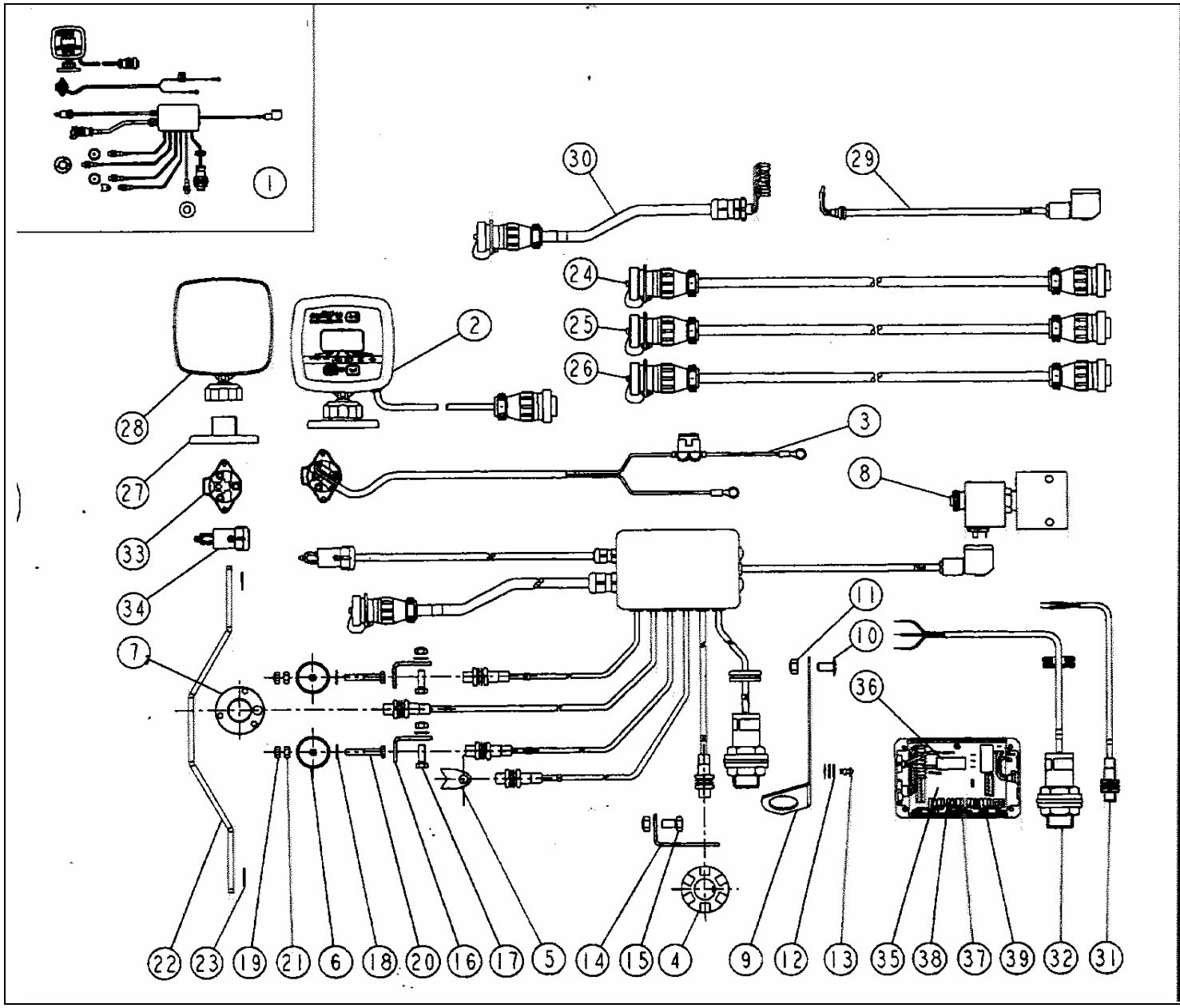

Rep	Code	Désignation
1	983612	Boitier electro sulky-tronic ps
2	983606	Boitier sulky-tronic
3	983802	Faisceau d alimentation
4	983916	Aimant de distribution 6 plots
5	983915	Aimant a collier
6	983914	Aimant
7	720269	Aimant de turbine
8	795522	Electrovanne
9	942041	Equerre support jauge
10	535853	Vis trl 8x16 zn 6 c fe
11	571458	Ecrou frein h8 zn 6 c fe
12	573804	Rondelle l4 n inox a2 70
13	598041	Rivet aveugle 4x10 alu
14	996510	Support capteur dist uw
15	551865	Vis h 8x15 zn 6 c fe fst
16	962016	Equerre de toit
17	551680	Vis h 6x20 zn 6 c fe fp
18	573107	Rondelle m6 n zn 6 c fe
19	571406	Ecrou frein nylon h6 zn 6 c fe
20	551685	Vis h 6x35 zn 6 c fe
21	571206	Ecrou h6 zn 6 c fe
22	951239	Support capteur crary
23	573206	Rondelle l6 n zn 6 c fe
24	983619	Rallonge 4 metres sulky-tronic
25	983620	Rallonge 6 metres sulky-tronic
26	983621	Rallonge 9 metres sulky-tronic
27	951193	Socle de boitier electronique
28	962088	Boitier electronique nu
29	720401	Faisceau electrovanne 0m80
30	983805	Faisceau information tronic
31	983912	Capteur ils
32	983917	Capteur de niveau
33	983908	Prise alimentation femelle
34	983909	Prise alimentation male
35	720257	Circuit imprime sulky-tronic
36	720407	Relais sulky-tronic
37	720256	Boite de connexion avec circuit
38	720277	Connecteur 2 broches
39	720278	Connecteur 3 broches

RDS System

UM_14_00	n° de série: ->

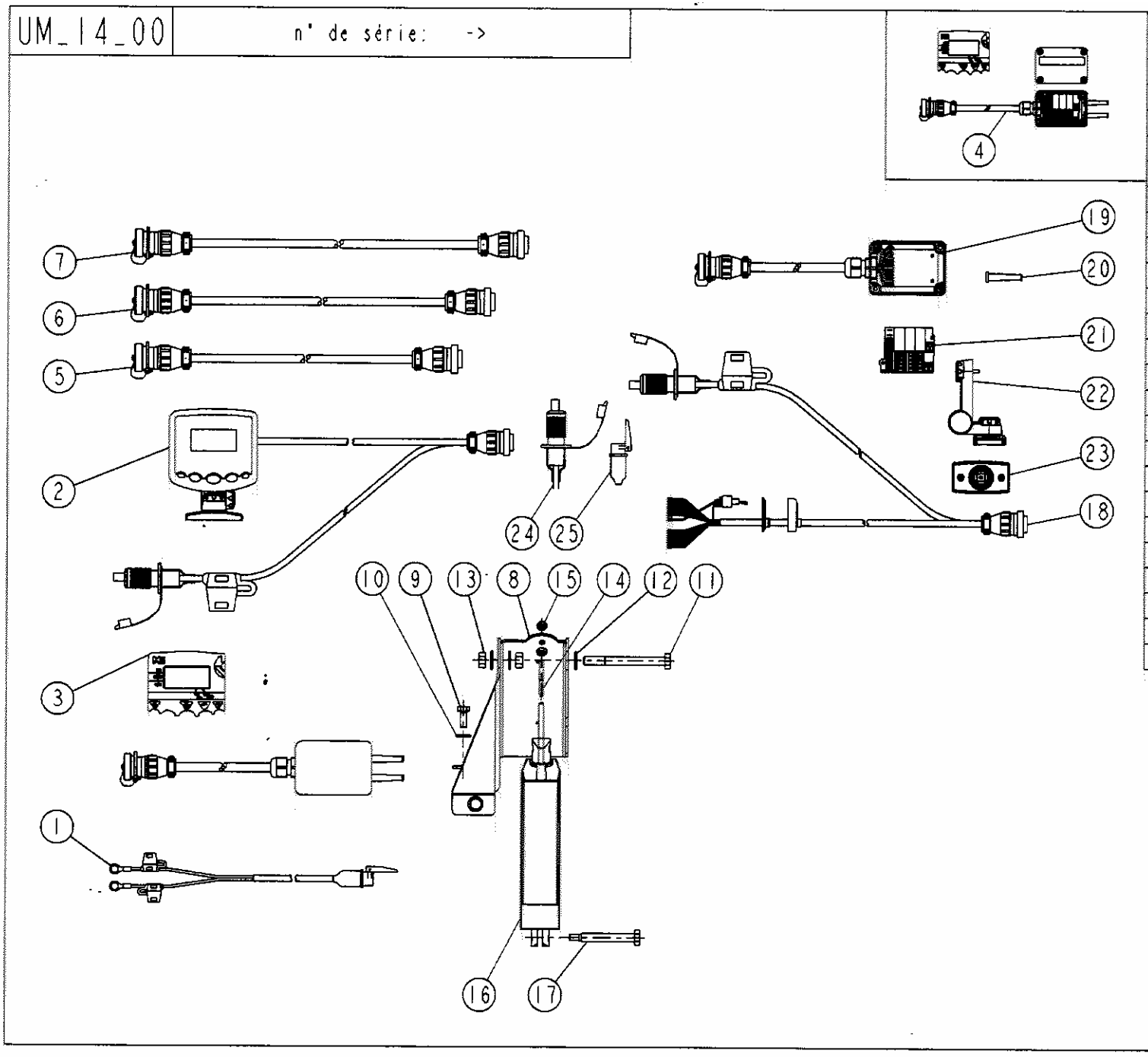

rep	code	COMMANDE_MS_SEMOIRS_RCH - 03-Nov-2005
1	983712	FAISCEAU_12_VOLTS_COBO
2	983632	CONSOLE_ULTRON-MS
3	983929	FACADE_MS
4	983635	BOITE_DE_CONNEXION_MS
5	983619	RALLONGE_ULTRON_4M_16_VOIES
6	983620	RALLONGE_ULTRON_6M_16_VOIES
7	983621	RALLONGE_ULTRON_9M_16_VOIES
8	951287	SUPPORT_VERIN_LINAK_VARIATEUR
9	551870	VIS_H_8X20_ZN_6_C_FE_8_8_FST
10	573158	RONDELLE_M8_N_ZN_6_C_FE
11	552140	VIS_H_10X100_ZN_6_C_FE_8_8_FP
12	573109	RONDELLE_M10_N_ZN_6_C_FE
13	571210	ECROU_H10_ZN_6_C_FE
14	599056	VIS_A_OEILLET_M_6_X_40
15	571206	ECROU_H6_ZN_6_C_FE
16	982501	VERIN_ELECTRIQUE_DPB
17	921089	BROCHE_VERIN_LINACK_VARIATEUR
18	720822	CABLE_INFO_CONSOLE_ULTRON-MS
19	720827	CABLE_INFO_MS_BOITE_CONNEX_NUE
20	720826	PASSE_FIL_ETROIT_ULTRON-MS
21	720828	CIRCUIT_IMPRIME_MS
22	720821	KIT_SUPPORT_CONSOLE_ULTRON-MS
23	720873	SOCLE_SUPPORT_CONSOLE_ULTRON-MS
24	720855	PRISE_MALE_12V_COBO
25	720854	PRISE_FEMELLE_12V_COBO

MS variable Seeding System